Project		Catalog #		Type	
Prepared by		Notes		Date	

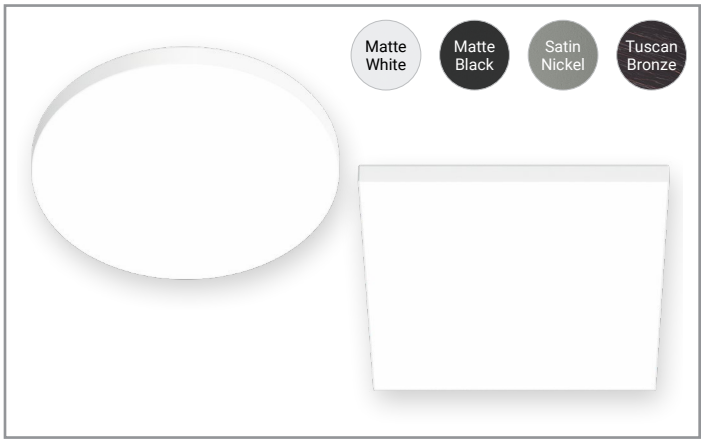

HALO

SMX6 Edgless Surface Mount LED Downlight

The SMX series redefines the surface downlighting experience. With a fully luminous lens face, this series provides exceptional light quality with a sleek, edgeless design that blends effortlessly into any ceiling. The SMX fixtures are engineered to offer a versatile downlighting solution with selectable lumens and color temperatures including dim-to-warm in flicker-free phase cut or 0-10V[1] dimming options. The innovative mounting method ensures a hassle-free installation that seats the fixture securely against the ceiling in either junction boxes or recessed housings. Upgrade your lighting experience with the SMX series and enjoy a seamless blend of style and functionality.

Typical Applications Residential

1. 0-10V versions coming soon

Refer to ENERGY STAR® Certified Products List.
Can be used to comply with California Title 24 High Efficacy requirements.[2]
Certified to California Appliance Efficiency Database under JA8.[2]

Interactive Menu

- Order Information page 2
- Product Specifications page 4
- Energy Data page 5
- Photometric Data page 5
- Product Warranty

Phase Cut Square, 0-10V Round & Square Available July 2025

Top Product Features

- 6" Surface Mount Edgeless Design
- Fully luminous edge-to-edge lens with no front face flange
- **6-Position Switch:** 5-color Field-SeleCCTable (2700K, 3000K, 3500K, 4000K, 5000K) + Dim-to-Warm (3000K dims to 1800K); 90+ CRI
- **Brightness:** Lumen Select 750/900/1200 lm (nominal)
- **Dimming:** Dims to less than 5% (phase cut LE/TE) with compatible dimmers; 120V input
- Mounting hardware, orange LED Quick Connect and E26 adapter included
- Edgeless Decorative Overlays (sold separately)
- AIR-TITE, wet location-listed, IC-rated, and ENERGY STAR® certified
- 50,000 hrs of maintenance-free operation
- 5-year warranty

Dimensional and Mounting Details

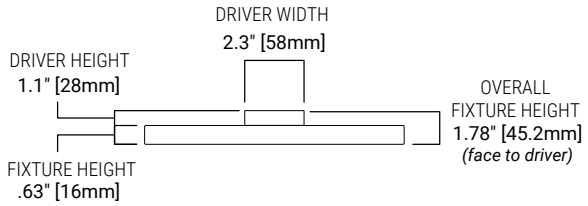

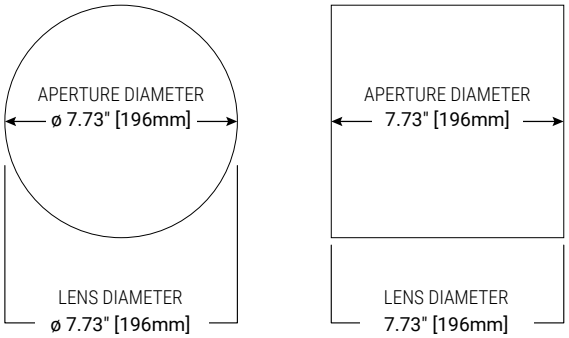

2. T24 and RoHS are self-tested by Cooper Lighting Solutions. Not a third party certification.

Order Information *(Available Today)*

Catalog Number	Description	Lumens (nominal)	CCT	Finish	Driver Compatibilty	Packaging
SMX6RLSFSD2W	6" Round Surface Mount LED Downlight	Lumen Selectable: 750/900/1200 lm	90+ CRI, Field Selectable CCT: Dim-to-Warm/2700/3000/3500/4000/5000K	Matte White	Phase Cut LE/TE 5%; 120V	Plastic-free recyclable

Accessories		
Catalog Number	**Description**	**Finish**
SMX6RTRMMW	6" Round Decorative Overlay	Paintable Matte White
SMX6RTRMMB	6" Round Decorative Overlay	Matte Black
SMX6RTRMSN	6" Round Decorative Overlay	Satin Nickel
SMX6RTRMTBZ	6" Round Decorative Overlay	Tuscan Bronze

Decorative Overlays

SMX6RTRMMW
Paintable Matte White

SMX6RTRMMB
Matte Black

SMX6RTRMSN
Satin Nickel

SMX6RTRMTBZ
Tuscan Bronze

Available July 2025

Phase Cut - Square

Catalog Number	Description	Lumens (nominal)	CCT	Finish	Driver Compatibilty	Packaging
SMX6SLSFSD2W	6" Square Surface Mount LED Downlight	Lumen Selectable: 750/900/1200 lm	90+ CRI, Field Selectable CCT: Dim-to-Warm/2700/3000/3500/4000/5000K	Matte White	Phase Cut LE/TE 5%; 120V	Plastic-free recyclable

0-10V - Round & Square

Catalog Number	Description	Lumens (nominal)	CCT	Finish	Driver Compatibilty	Packaging
SMX6RLSFS010	6" Round Surface Mount LED Downlight	Lumen Selectable: 750/900/1200 lm	90+ CRI, Field Selectable CCT: 2700/3000/3500/4000/5000K	Matte White	0-10V 5%; 120-277V	Plastic-free recyclable
SMX6SLSFS010	6" Square Surface Mount LED Downlight	Lumen Selectable: 750/900/1200 lm	90+ CRI, Field Selectable CCT: 2700/3000/3500/4000/5000K	Matte White	0-10V 5%; 120-277V	Plastic-free recyclable

Accessories		
Catalog Number	**Description**	**Finish**
SMX6STRMMW	6" Square Decorative Overlay	Paintable Matte White
SMX6STRMMB	6" Square Decorative Overlay	Matte Black
SMX6STRMSN	6" Square Decorative Overlay	Satin Nickel
SMX6STRMTBZ	6" Square Decorative Overlay	Tuscan Bronze

Decorative Overlays

SMX6STRMMW
Paintable Matte White

SMX6STRMMB
Matte Black

SMX6STRMSN
Satin Nickel

SMX6STRMTBZ
Tuscan Bronze

SMX6RLSFSD2W

SMX6RLSFS010
(Available July 2025)

SMX6SLSFSD2W
(Available July 2025)

SMX6SLSFS010
(Available July 2025)

Compatible Junction Boxes [3]

Octagon
Steel Light Fixture w/Fan Box
4" x 4" x 2-1/8"

Square
Steel Deep Box
4" x 4" x 2-1/8"

Round
New Work Fixture Box (Plastic)
4" Diameter x 2-3/16"

Round
New Work Ceiling Box (Plastic)
3-1/2" Diameter x 2-3/4"

Round
Old Work Box (Plastic)
4-1/4" Diameter flange (3-1/2" I.D.) x 2-5/8"

Round
New Work Fixture Box (Plastic) w/Bar Hanger
4" x 2-3/16"

TP316
For non-metallic cable
4" x 4" x 2-1/8"

TP317
For metal clad cable
4" x 4" x 2-1/8"

Cat #: JB4FR2
4" NC JBox for Fire Rated Ceilings
4" diameter x 5-1/2"
(102mm x 140mm)

3. This is a representative list of compatible junction boxes only. Information contained in this literature about other manufacturers' products is from published information made available by the manufacturer and is deemed to be reliable, but has not been verified. Cooper Lighting Solutions makes no specific recommendation on product selection and there are no warranties of performance or compatibility implied. Installer must determine that site conditions are suitable to allow proper installation of the mounting bracket in the box.

Compatible Housings

HALO - 5" Housings [4]

HALO LED Housings	H550ICAT, H550RICAT, E550ICAT, E550RICAT
Standard Housings	H5ICAT, H5ICATNB, H5RICAT, H5T, H5TNB, H5RT, E5ICAT, E5ICATNB, E5RICAT, E5RTAT, E5TAT, E5TATNB
Shallow Housings	H25ICAT, H25RICAT, H25ICATNB, H2550ICAT
Fire Rated Housings	H550FR2ICAT

4. This fixture is UL Certified for use with any 5" diameter recessed housing constructed of steel or aluminum with an internal volume that exceeds 107.9" in^3 addition to those noted below and does not exceed the input rating of the housing.

HALO - 6" Housings [5]

HALO LED	H750ICAT, H750RICAT, H750TCP, H2750ICAT, H2750RICAT, E750ICAT, E750RICAT
Standard Housing	H7ICAT, H7ICT, H7ICATNB, H7ICTNB, H7TNB, H7UICAT, H7TCP, H7RICAT, H7RICT, E7ICAT, E7ICATNB, E7RICAT, E7RTAT, E7TAT, E7TATNB, H7ICATNB, H7ICTNB, H7TNB
Shallow Housing	H27ICAT, H27RICAT, H27ICT, H27RICT, H27T, H27RT, E27ICAT, E27RICAT, E27TAT, E27RTAT, H2750ICAT
Fire Rated Housing	H750FR2ICAT

5. The fixutre is UL Certified for use with any 6" diameter recessed luminaire constructed of steel or aluminum with an internal volume that exceeds 97.4 in^3 addition to those noted below and does not exceed the input rating of the luminaire.

Product Specifications

Module
- The LED surface mount downlight consists of an LED array, optical assembly, driver, and edgeless trim
- Achieves L70 at 50,000 hrs in IC (insulation contact) and non-IC applications

Selectable System
- Use the CCT select switch to choose between Dim-to-Warm (D2W), 2700K, 3000K, 3500K, 4000K, and 5000K CCT
- Dim-to-Warm option starts at 3000K and warms to 1800K as the fixture dims
- Factory default is set to 3000K
- Use the 3-position Lumen Select switch to choose the brightness level (Low, Medium, High)
- Lumen Select factory default is to the highest lumen option

LED Array
- Mid-power LED array provides a uniform light source with high efficiency and no pixilation
- 90+ CRI minimum, R9 greater than 50
- Color accuracy at 3 SDCM at the endpoints and 4 SDCM in the middle provide color consistency and uniformity

Driver
- Integral 120V 60Hz constant current driver provides noise-free, high-efficiency operation
- **Dimmable:** Continuous, flicker-free dimming from 100% to 5% with compatible leading or trailing edge (LE/TE) 120V phase cut dimmers; (See Dimming Guide for compatible dimmers.)
  - **Tip:** For optimal dimming performance, consider dimmers with low-end trim adjustment; Note that some dimmers require a neutral wire in the box.
- **Wiring:** Includes optional inline electrical orange LED Quick Connect and E26 medium socket adapter to provide mains connection

Electrical Junction Box Mounting
- Twist and lock steel mounting bracket to fit snugly to the ceiling
- Installs from below the ceiling in most 3O (3-1/2") and 4O (4") standard round/octagonal junction boxes along with compact (pancake) junction boxes
- Mounting bracket covers selectable switches
- May be used in compatible electrical junction boxes in direct contact with insulation, including spray foam insulation
- Installer must ensure compatibility of fit, wiring, and proper mounting in the electrical junction box. This includes all applicable national and local electrical along with building coded NEMA LSD 57-2013.
- Reference installation instructions for complete mounting steps
- Compatible with JB4FR2 for up to 2 hour fire safe protection.
  - JB4FR2 Meets UL514A Metallic Outlet Box and is suitable for use in fire-rated ceiling construction that requires up to 2-hour protection per International Building Code Section 714

Recessed Housing Mounting
Non-California versions only
- Optional steel torsion springs or friction blades to hold the module securely in a recessed housing
  - Installs from below the ceiling to HALO 5" and 6" recessed housings with included torsion springs
- The included wire nuts, LED connector, and E26 medium socket adapter allow for easy mounting to recessed housings
- Reference installation instructions for complete mounting steps
- May be installed in IC-rated recessed housings that are in direct contact with insulation

NOTE: Not for use in recessed housings in direct contact with spray foam insulation. Refer to NEMA LSD 57-2013

Gasket
- Closed-cell gasket achieves restrictive airflow requirements without additional caulking

Decorative Overlays (sold separately)
- Overlays cover the edge of the fixture while maintaining the edgeless design and are sold as an accessory for a designer finish
  - Paintable Matte White
  - Satin Nickel
  - Matte Black
  - Tuscan Bronze

Compliance
- cULus certified for US and Canada
- Wet Location listed for showers and covered outdoor ceilings
- Airtight per ASTM-E283 (no gasket necessary)
- Suitable for use in clothes closets when installed in accordance with the NEC 410.16 spacing requirements
- EMI/RFI emissions per FCC 47CFR Part 15 consumer limits
- Contains no mercury or lead and RoHS compliant*
- Photometric testing in accordance with IES LM-79-08
- Lumen maintenance projections in accordance with IES LM-80-08 and TM-21-11
- ENERGY STAR® certified, reference Certified Light Fixtures database
- Certified to State of California Title 20, State regulated LED Lamp; reference Modernized Appliance Efficiency Database System (MAEDBS) for State-regulate d LED Lamp
- Can be used for State of California Title 24 high efficacy LED compliance under JA8*, reference Modernized Appliance Efficiency Database System (MAEDBS) for 2022 JA8 High Efficacy Lighting

Warranty
- Five year limited warranty, consult website for details. www.cooperlighting.com/warranty

[2] T24 and RoHS are self-tested by Cooper Lighting Solutions. Not a third party certification.

Energy Data

	120V (Triac)		120V-277V (0-10V) *(Available July 2025)*			
	Round	Square *(Available July 2025)*	Round		Square	
	SMX6RLSFSD2W	SMX6SLSFSD2W	SMX6RLSFS010		SMX6SLSFS010	
Lumens	750	750	750	750	750	750
Input Voltage (V)	120V	120V	120V	277V	120V	277V
Input Current (A)	67mA	67mA	62mA	33mA	62mA	33mA
Input Power (W)	7.89W	7.89W	7.6W	8.5W	7.61W	8.51W
Efficiency	80.66%	80.66%	79.45%	74.52%	79.35%	74.88%
Inrush (A)	2.86A @ 44usec	2.86A @ 44usec	1.22A @ 116usec	2.6 @ 124usec	1.22A @ 116usec	2.6 @ 124usec
THDi (%)	16.3%	16.3%	6.63%	18.6%	6.63%	18.61%
PF	0.959	0.959	0.995	0.927	0.995	0.928
T Ambient	-30 to +40 °C	-30 to +40 °C	-30 to +40 °C	-30 to +40 °C	-30 to +40 °C	-30 to +40 °C
Sound Rating	19.71dB @1feet	19.71dB @1feet	19.29dB @1feet	19.29dB @1feet	19.29dB @1feet	19.29dB @1feet
Efficacy(LPW)	95LPW	95LPW	99LPW	88LPW	99LPW	88LPW
Lumens	900	900	900	900	900	900
Input Voltage (V)	120V	120V	120V	277V	120V	277V
Input Current (A)	81mA	81mA	86mA	42mA	85mA	43mA
Input Power (W)	9.46W	9.46W	10.33W	11.18W	10.32W	11.09W
Efficiency	81.01%	81.01%	81.16%	77.36%	81.94%	78.61%
Inrush (A)	2.86A @ 44usec	2.86A @ 44usec	1.22A @ 116usec	2.6 @ 124usec	1.22A @ 116usec	2.6 @ 124usec
THDi (%)	14.1%	14.1%	7.3%	13%	7.31%	13.1%
PF	0.971	0.971	0.995	0.958	0.996	0.959
T Ambient	-30 to +40 °C	-30 to +40 °C	-30 to +40 °C	-30 to +40 °C	-30 to +40 °C	-30 to +40 °C
Sound Rating	19.71dB @1feet	19.71dB @1feet	19.29dB @1feet	19.29dB @1feet	19.29dB @1feet	19.29dB @1feet
Efficacy(LPW)	95LPW	95LPW	87LPW	81LPW	87LPW	81LPW
Lumens	1200	1200	1200	1200	1200	1200
Input Voltage (V)	120V	120V	120V	277V	120V	277V
Input Current (A)	116mA	116mA	107mA	50mA	107mA	50mA
Input Power (W)	13.8W	13.8W	12.73W	13.44W	12.98W	13.8W
Efficiency	82.12%	82.12%	81.47%	78.9%	82.35%	78.43%
Inrush (A)	2.86A @ 44usec	2.86A @ 44usec	1.22A @ 116usec	2.6 @ 124usec	1.22A @ 116usec	2.6 @ 124usec
THDi (%)	11.6%	11.6%	11.72%	11.47%	12.11%	11.62%
PF	0.982	0.982	0.991	0.972	0.991	0.973
T Ambient	-30 to +40 °C	-30 to +40 °C	-30 to +40 °C	-30 to +40 °C	-30 to +40 °C	-30 to +40 °C
Sound Rating	19.71dB @1feet	19.71dB @1feet	19.29dB @1feet	19.29dB @1feet	19.29dB @1feet	19.29dB @1feet
Efficacy(LPW)	87LPW	87LPW	94LPW	89LPW	93LPW	87LPW

SMX6RLSFSD2W *(Equivalent to 100W Incandescent)*

CCT	Watts	Lumens	LPW	CRI
2700K	13.9	1385	99.7	93
3000K	14.0	1405	100.4	93
3500K	14.1	1420	100.7	93
4000K	14.0	1430	102.1	93
5000K	13.9	1450	104.3	93

SMX6SLSFSD2W *(Equivalent to 100W Incandescent)*

CCT	Watts	Lumens	LPW	CRI
2700K	13.8	1395	100.9	93
3000K	13.6	1360	100	93
3500K	13.6	1390	102.2	93
4000K	13.6	1390	102.2	93
5000K	13.5	1390	103	93

SMX6RLSFS010 *(Equivalent to 100W Incandescent)*

CCT	Watts	Lumens	LPW	CRI
2700K	12.5	1265	101.1	93
3000K	12.4	1265	102	93
3500K	12.4	1270	102.4	93
4000K	12.4	1280	103.2	93
5000K	12.3	1310	106.5	93

SMX6SLSFS010 *(Equivalent to 100W Incandescent)*

CCT	Watts	Lumens	LPW	CRI
2700K	12.4	1255	101	93
3000K	12.4	1215	98	93
3500K	12.4	1210	97.6	93
4000K	12.4	1220	98.4	93
5000K	12.3	1230	100	93

Photometric Data

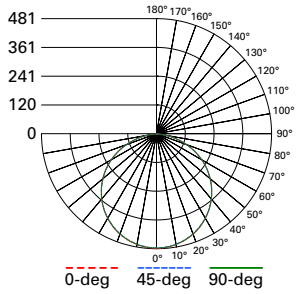

SMX6RLSFSD2W-1200LM-3000K

Spacing criterion:
(0-180) 1.27 | (90-270) 1.27 | (Diagonal) 1.39

Beam Angle: 115°

Field Angle: 163°

Lumens: 1405

Input Watts: 14 W

Efficacy: 100.4 LPW

UGR: 22

Test Report: P938627

Zonal Lumen	Lumens	% Lumens
0-30	374	26.6
0-40	615	43.8
0-60	1099	78.2
0-90	1405	100

CCT: Range of 2700K - 5000K

Dim-to-Warm: Range of 1800K - 3000K

TM-30-15	Rf = 93
	Rg = 101
CRI/CIE	Ra = 97
	R9 = 79.8

Cooper Lighting Solutions
1121 Highway 74 South
Peachtree City, GA 30269
P: 770-486-4800
www.cooperlighting.com

© 2025 Cooper Lighting Solutions
All Rights Reserved.

Specifications and dimensions subject to change without notice.

Project		Catalog #		Type	
Prepared by		Notes		Date	

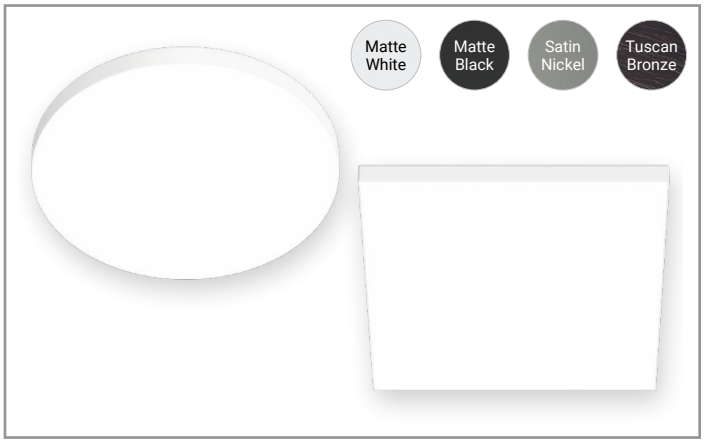

HALO

SMX6 Edgless Surface Mount LED Downlight

The SMX series redefines the surface downlighting experience. With a fully luminous lens face, this series provides exceptional light quality with a sleek, edgeless design that blends effortlessly into any ceiling. The SMX fixtures are engineered to offer a versatile downlighting solution with selectable lumens and color temperatures including dim-to-warm in flicker-free phase cut or 0-10V[1] dimming options. The innovative mounting method ensures a hassle-free installation that seats the fixture securely against the ceiling in either junction boxes or recessed housings. Upgrade your lighting experience with the SMX series and enjoy a seamless blend of style and functionality.

Typical Applications Residential

1. 0-10V versions coming soon

Refer to ENERGY STAR® Certified Products List.
Can be used to comply with California Title 24 High Efficacy requirements.[2]
Certified to California Appliance Efficiency Database under JA8.[2]

Interactive Menu

- Order Information page 2
- Product Specifications page 4
- Energy Data page 5
- Photometric Data page 5
- Product Warranty

Phase Cut Square, 0-10V Round & Square Available July 2025

Top Product Features

- 6" Surface Mount Edgeless Design
- Fully luminous edge-to-edge lens with no front face flange
- **6-Position Switch:** 5-color Field-SeleCCTable (2700K, 3000K, 3500K, 4000K, 5000K) + Dim-to-Warm (3000K dims to 1800K); 90+ CRI
- **Brightness:** Lumen Select 750/900/1200 lm (nominal)
- **Dimming:** Dims to less than 5% (phase cut LE/TE) with compatible dimmers; 120V input
- Mounting hardware, orange LED Quick Connect and E26 adapter included
- Edgeless Decorative Overlays (sold separately)
- AIR-TITE, wet location-listed, IC-rated, and ENERGY STAR® certified
- 50,000 hrs of maintenance-free operation
- 5-year warranty

Dimensional and Mounting Details

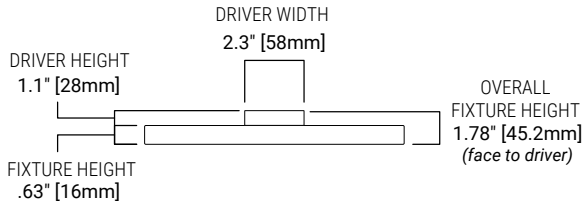

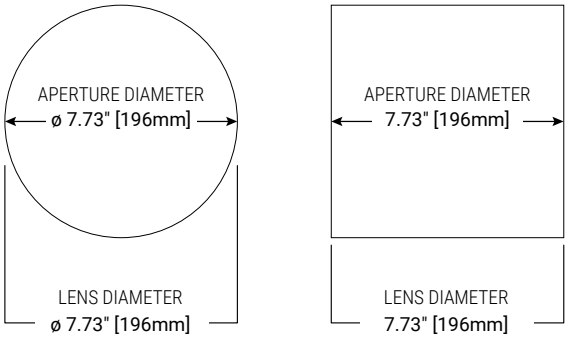

2. T24 and RoHS are self-tested by Cooper Lighting Solutions. Not a third party certification.

Order Information *(Available Today)*

Catalog Number	Description	Lumens (nominal)	CCT	Finish	Driver Compatibilty	Packaging
SMX6RLSFSD2W	6" Round Surface Mount LED Downlight	Lumen Selectable: 750/900/1200 lm	90+ CRI, Field Selectable CCT: Dim-to-Warm/2700/3000/3500/4000/5000K	Matte White	Phase Cut LE/TE 5%; 120V	Plastic-free recyclable

Accessories		
Catalog Number	**Description**	**Finish**
SMX6RTRMMW	6" Round Decorative Overlay	Paintable Matte White
SMX6RTRMMB	6" Round Decorative Overlay	Matte Black
SMX6RTRMSN	6" Round Decorative Overlay	Satin Nickel
SMX6RTRMTBZ	6" Round Decorative Overlay	Tuscan Bronze

Decorative Overlays

SMX6RTRMMW
Paintable Matte White

SMX6RTRMMB
Matte Black

SMX6RTRMSN
Satin Nickel

SMX6RTRMTBZ
Tuscan Bronze

Available July 2025

Phase Cut - Square

Catalog Number	Description	Lumens (nominal)	CCT	Finish	Driver Compatibilty	Packaging
SMX6SLSFSD2W	6" Square Surface Mount LED Downlight	Lumen Selectable: 750/900/1200 lm	90+ CRI, Field Selectable CCT: Dim-to-Warm/2700/3000/3500/4000/5000K	Matte White	Phase Cut LE/TE 5%; 120V	Plastic-free recyclable

0-10V - Round & Square

Catalog Number	Description	Lumens (nominal)	CCT	Finish	Driver Compatibilty	Packaging
SMX6RLSFS010	6" Round Surface Mount LED Downlight	Lumen Selectable: 750/900/1200 lm	90+ CRI, Field Selectable CCT: 2700/3000/3500/4000/5000K	Matte White	0-10V 5%; 120-277V	Plastic-free recyclable
SMX6SLSFS010	6" Square Surface Mount LED Downlight	Lumen Selectable: 750/900/1200 lm	90+ CRI, Field Selectable CCT: 2700/3000/3500/4000/5000K	Matte White	0-10V 5%; 120-277V	Plastic-free recyclable

Accessories		
Catalog Number	**Description**	**Finish**
SMX6STRMMW	6" Square Decorative Overlay	Paintable Matte White
SMX6STRMMB	6" Square Decorative Overlay	Matte Black
SMX6STRMSN	6" Square Decorative Overlay	Satin Nickel
SMX6STRMTBZ	6" Square Decorative Overlay	Tuscan Bronze

Decorative Overlays

SMX6STRMMW
Paintable Matte White

SMX6STRMMB
Matte Black

SMX6STRMSN
Satin Nickel

SMX6STRMTBZ
Tuscan Bronze

SMX6RLSFSD2W

SMX6RLSFS010
(Available July 2025)

SMX6SLSFSD2W
(Available July 2025)

SMX6SLSFS010
(Available July 2025)

Compatible Junction Boxes [3]

Octagon
Steel Light Fixture w/Fan Box
4" x 4" x 2-1/8"

Square
Steel Deep Box
4" x 4" x 2-1/8"

Round
New Work Fixture Box (Plastic)
4" Diameter x 2-3/16"

Round
New Work Ceiling Box (Plastic)
3-1/2" Diameter x 2-3/4"

Round
Old Work Box (Plastic)
4-1/4" Diameter flange (3-1/2" I.D.) x 2-5/8"

Round
New Work Fixture Box (Plastic) w/Bar Hanger
4" x 2-3/16"

TP316
For non-metallic cable
4" x 4" x 2-1/8"

TP317
For metal clad cable
4" x 4" x 2-1/8"

Cat #: JB4FR2
4" NC JBox for Fire Rated Ceilings
4" diameter x 5-1/2"
(102mm x 140mm)

3. This is a representative list of compatible junction boxes only. Information contained in this literature about other manufacturers' products is from published information made available by the manufacturer and is deemed to be reliable, but has not been verified. Cooper Lighting Solutions makes no specific recommendation on product selection and there are no warranties of performance or compatibility implied. Installer must determine that site conditions are suitable to allow proper installation of the mounting bracket in the box.

Compatible Housings

HALO - 5" Housings [4]

HALO LED Housings	H550ICAT, H550RICAT, E550ICAT, E550RICAT
Standard Housings	H5ICAT, H5ICATNB, H5RICAT, H5T, H5TNB, H5RT, E5ICAT, E5ICATNB, E5RICAT, E5RTAT, E5TAT, E5TATNB
Shallow Housings	H25ICAT, H25RICAT, H25ICATNB, H2550ICAT
Fire Rated Housings	H550FR2ICAT

4. This fixture is UL Certified for use with any 5" diameter recessed housing constructed of steel or aluminum with an internal volume that exceeds 107.9" in^3 addition to those noted below and does not exceed the input rating of the housing.

HALO - 6" Housings [5]

HALO LED	H750ICAT, H750RICAT, H750TCP, H2750ICAT, H2750RICAT, E750ICAT, E750RICAT
Standard Housing	H7ICAT, H7ICT, H7ICATNB, H7ICTNB, H7TNB, H7UICAT, H7TCP, H7RICAT, H7RICT, E7ICAT, E7ICATNB, E7RICAT, E7RTAT, E7TAT, E7TATNB, H7ICATNB, H7ICTNB, H7TNB
Shallow Housing	H27ICAT, H27RICAT, H27ICT, H27RICT, H27T, H27RT, E27ICAT, E27RICAT, E27TAT, E27RTAT, H2750ICAT
Fire Rated Housing	H750FR2ICAT

5. The fixutre is UL Certified for use with any 6" diameter recessed luminaire constructed of steel or aluminum with an internal volume that exceeds 97.4 in^3 addition to those noted below and does not exceed the input rating of the luminaire.

Product Specifications

Module
- The LED surface mount downlight consists of an LED array, optical assembly, driver, and edgeless trim
- Achieves L70 at 50,000 hrs in IC (insulation contact) and non-IC applications

Selectable System
- Use the CCT select switch to choose between Dim-to-Warm (D2W), 2700K, 3000K, 3500K, 4000K, and 5000K CCT
- Dim-to-Warm option starts at 3000K and warms to 1800K as the fixture dims
- Factory default is set to 3000K
- Use the 3-position Lumen Select switch to choose the brightness level (Low, Medium, High)
- Lumen Select factory default is to the highest lumen option

LED Array
- Mid-power LED array provides a uniform light source with high efficiency and no pixilation
- 90+ CRI minimum, R9 greater than 50
- Color accuracy at 3 SDCM at the endpoints and 4 SDCM in the middle provide color consistency and uniformity

Driver
- Integral 120V 60Hz constant current driver provides noise-free, high-efficiency operation
- **Dimmable:** Continuous, flicker-free dimming from 100% to 5% with compatible leading or trailing edge (LE/TE) 120V phase cut dimmers; (See Dimming Guide for compatible dimmers.)
  - **Tip:** For optimal dimming performance, consider dimmers with low-end trim adjustment; Note that some dimmers require a neutral wire in the box.
- **Wiring:** Includes optional inline electrical orange LED Quick Connect and E26 medium socket adapter to provide mains connection

Electrical Junction Box Mounting
- Twist and lock steel mounting bracket to fit snugly to the ceiling
- Installs from below the ceiling in most 3O (3-1/2") and 4O (4") standard round/octagonal junction boxes along with compact (pancake) junction boxes
- Mounting bracket covers selectable switches
- May be used in compatible electrical junction boxes in direct contact with insulation, including spray foam insulation
- Installer must ensure compatibility of fit, wiring, and proper mounting in the electrical junction box. This includes all applicable national and local electrical along with building coded NEMA LSD 57-2013.
- Reference installation instructions for complete mounting steps
- Compatible with JB4FR2 for up to 2 hour fire safe protection.
  - JB4FR2 Meets UL514A Metallic Outlet Box and is suitable for use in fire-rated ceiling construction that requires up to 2-hour protection per International Building Code Section 714

Recessed Housing Mounting
Non-California versions only
- Optional steel torsion springs or friction blades to hold the module securely in a recessed housing
  - Installs from below the ceiling to HALO 5" and 6" recessed housings with included torsion springs
- The included wire nuts, LED connector, and E26 medium socket adapter allow for easy mounting to recessed housings
- Reference installation instructions for complete mounting steps
- May be installed in IC-rated recessed housings that are in direct contact with insulation

NOTE: Not for use in recessed housings in direct contact with spray foam insulation. Refer to NEMA LSD 57-2013

Gasket
- Closed-cell gasket achieves restrictive airflow requirements without additional caulking

Decorative Overlays (sold separately)
- Overlays cover the edge of the fixture while maintaining the edgeless design and are sold as an accessory for a designer finish
  - Paintable Matte White
  - Satin Nickel
  - Matte Black
  - Tuscan Bronze

Compliance
- cULus certified for US and Canada
- Wet Location listed for showers and covered outdoor ceilings
- Airtight per ASTM-E283 (no gasket necessary)
- Suitable for use in clothes closets when installed in accordance with the NEC 410.16 spacing requirements
- EMI/RFI emissions per FCC 47CFR Part 15 consumer limits
- Contains no mercury or lead and RoHS compliant*
- Photometric testing in accordance with IES LM-79-08
- Lumen maintenance projections in accordance with IES LM-80-08 and TM-21-11
- ENERGY STAR® certified, reference Certified Light Fixtures database
- Certified to State of California Title 20, State regulated LED Lamp; reference Modernized Appliance Efficiency Database System (MAEDBS) for State-regulate d LED Lamp
- Can be used for State of California Title 24 high efficacy LED compliance under JA8*, reference Modernized Appliance Efficiency Database System (MAEDBS) for 2022 JA8 High Efficacy Lighting

Warranty
- Five year limited warranty, consult website for details. www.cooperlighting.com/warranty

[2] T24 and RoHS are self-tested by Cooper Lighting Solutions. Not a third party certification.

Energy Data

	120V (Triac)		120V-277V (0-10V) *(Available July 2025)*			
	Round	Square *(Available July 2025)*	Round		Square	
	SMX6RLSFSD2W	SMX6SLSFSD2W	SMX6RLSFS010		SMX6SLSFS010	
Lumens	750	750	750	750	750	750
Input Voltage (V)	120V	120V	120V	277V	120V	277V
Input Current (A)	67mA	67mA	62mA	33mA	62mA	33mA
Input Power (W)	7.89W	7.89W	7.6W	8.5W	7.61W	8.51W
Efficiency	80.66%	80.66%	79.45%	74.52%	79.35%	74.88%
Inrush (A)	2.86A @ 44usec	2.86A @ 44usec	1.22A @ 116usec	2.6 @ 124usec	1.22A @ 116usec	2.6 @ 124usec
THDi (%)	16.3%	16.3%	6.63%	18.6%	6.63%	18.61%
PF	0.959	0.959	0.995	0.927	0.995	0.928
T Ambient	-30 to +40 °C	-30 to +40 °C	-30 to +40 °C	-30 to +40 °C	-30 to +40 °C	-30 to +40 °C
Sound Rating	19.71dB @1feet	19.71dB @1feet	19.29dB @1feet	19.29dB @1feet	19.29dB @1feet	19.29dB @1feet
Efficacy(LPW)	95LPW	95LPW	99LPW	88LPW	99LPW	88LPW
Lumens	900	900	900	900	900	900
Input Voltage (V)	120V	120V	120V	277V	120V	277V
Input Current (A)	81mA	81mA	86mA	42mA	85mA	43mA
Input Power (W)	9.46W	9.46W	10.33W	11.18W	10.32W	11.09W
Efficiency	81.01%	81.01%	81.16%	77.36%	81.94%	78.61%
Inrush (A)	2.86A @ 44usec	2.86A @ 44usec	1.22A @ 116usec	2.6 @ 124usec	1.22A @ 116usec	2.6 @ 124usec
THDi (%)	14.1%	14.1%	7.3%	13%	7.31%	13.1%
PF	0.971	0.971	0.995	0.958	0.996	0.959
T Ambient	-30 to +40 °C	-30 to +40 °C	-30 to +40 °C	-30 to +40 °C	-30 to +40 °C	-30 to +40 °C
Sound Rating	19.71dB @1feet	19.71dB @1feet	19.29dB @1feet	19.29dB @1feet	19.29dB @1feet	19.29dB @1feet
Efficacy(LPW)	95LPW	95LPW	87LPW	81LPW	87LPW	81LPW
Lumens	1200	1200	1200	1200	1200	1200
Input Voltage (V)	120V	120V	120V	277V	120V	277V
Input Current (A)	116mA	116mA	107mA	50mA	107mA	50mA
Input Power (W)	13.8W	13.8W	12.73W	13.44W	12.98W	13.8W
Efficiency	82.12%	82.12%	81.47%	78.9%	82.35%	78.43%
Inrush (A)	2.86A @ 44usec	2.86A @ 44usec	1.22A @ 116usec	2.6 @ 124usec	1.22A @ 116usec	2.6 @ 124usec
THDi (%)	11.6%	11.6%	11.72%	11.47%	12.11%	11.62%
PF	0.982	0.982	0.991	0.972	0.991	0.973
T Ambient	-30 to +40 °C	-30 to +40 °C	-30 to +40 °C	-30 to +40 °C	-30 to +40 °C	-30 to +40 °C
Sound Rating	19.71dB @1feet	19.71dB @1feet	19.29dB @1feet	19.29dB @1feet	19.29dB @1feet	19.29dB @1feet
Efficacy(LPW)	87LPW	87LPW	94LPW	89LPW	93LPW	87LPW

SMX6RLSFSD2W *(Equivalent to 100W Incandescent)*

CCT	Watts	Lumens	LPW	CRI
2700K	13.9	1385	99.7	93
3000K	14.0	1405	100.4	93
3500K	14.1	1420	100.7	93
4000K	14.0	1430	102.1	93
5000K	13.9	1450	104.3	93

SMX6SLSFSD2W *(Equivalent to 100W Incandescent)*

CCT	Watts	Lumens	LPW	CRI
2700K	13.8	1395	100.9	93
3000K	13.6	1360	100	93
3500K	13.6	1390	102.2	93
4000K	13.6	1390	102.2	93
5000K	13.5	1390	103	93

SMX6RLSFS010 *(Equivalent to 100W Incandescent)*

CCT	Watts	Lumens	LPW	CRI
2700K	12.5	1265	101.1	93
3000K	12.4	1265	102	93
3500K	12.4	1270	102.4	93
4000K	12.4	1280	103.2	93
5000K	12.3	1310	106.5	93

SMX6SLSFS010 *(Equivalent to 100W Incandescent)*

CCT	Watts	Lumens	LPW	CRI
2700K	12.4	1255	101	93
3000K	12.4	1215	98	93
3500K	12.4	1210	97.6	93
4000K	12.4	1220	98.4	93
5000K	12.3	1230	100	93

Photometric Data

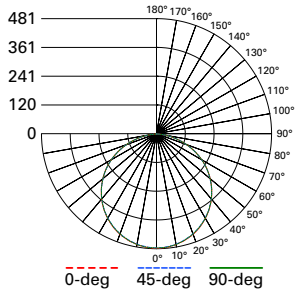

SMX6RLSFSD2W-1200LM-3000K

Spacing criterion:
(0-180) 1.27 | (90-270) 1.27 | (Diagonal) 1.39

Beam Angle: 115°

Field Angle: 163°

Lumens: 1405

Input Watts: 14 W

Efficacy: 100.4 LPW

UGR: 22

Test Report: P938627

Zonal Lumen	Lumens	% Lumens
0-30	374	26.6
0-40	615	43.8
0-60	1099	78.2
0-90	1405	100

CCT: Range of 2700K - 5000K

Dim-to-Warm: Range of 1800K - 3000K

TM-30-15	Rf = 93
	Rg = 101
CRI/CIE	Ra = 97
	R9 = 79.8

Cooper Lighting Solutions
1121 Highway 74 South
Peachtree City, GA 30269
P: 770-486-4800
www.cooperlighting.com

© 2025 Cooper Lighting Solutions
All Rights Reserved.

Specifications and dimensions subject to change without notice.