Project		Catalog #		Type	
Prepared by		Notes		Date	

HALO

RA Baffle Adjustable Recessed Canless LED Downlight

4" and 5/6" Baffle Adjustable Recessed Canless LED Downlights mount directly to the ceiling and provide up to 35° of tilt and 360° of rotation

Typical Applications

Residential

Interactive Menu

- Order Information page 2
- Product Specifications page 3
- Energy Data page 3
- Photometric Data page 4
- Product Warranty

Product Certification

Refer to ENERGY STAR® Certified Products List.
Can be used to comply with California Title 24 High Efficacy requirements.
Certified to California Appliance Efficiency Database under JA8.

Product Features

Top Product Features

- Available in 4" and 6" LED trims mount directly to ceilings - no housing required
- Adjustable gimbal tilts up to 35° and rotates 360° to aim light where it's needed
- 6-Position Switch: 5 Color Field-SeleCCTable soft white to daylight (2700K, 3000K, 3500K, 4000K, 5000K) + Dim-to-Warm (3000K dims to 1800K)
- Selectable Lumen Switch: Choose between 600/900 lumens
- 5% phase cut LE/TE dimming (120V input) with compatible controls (reference the RA Dimming Guide)

Dimensional and Mounting Details

additional product diagrams

RA4-DM

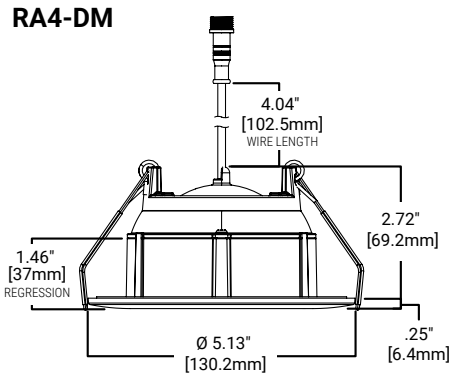

RA6-DM

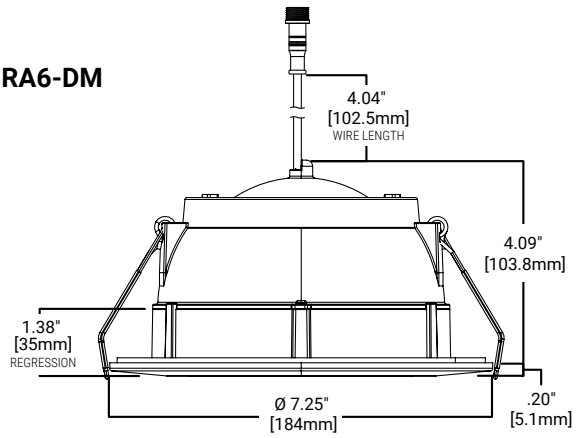

Order Information

Catalog Number	Description	Lumens (nominal)	CRI	CCT	Driver	Finish
RA4LS9FSD2W1EWHDM	4" Adjustable Canless LED Downlight	600/900 Selectable Lumens	90+CRI	6-Color Field-SeleCCTable: 2700K, 3000K, 3500K, 4000K, 5000K, Dim-to-Warm	5% Phase Cut LE/TE Dimming, 120V 60Hz	Matte White
RA6LS9FSD2W1EWHDM	6" Adjustable Canless LED Downlight	600/900 Selectable Lumens	90+CRI	6-Color Field-SeleCCTable: 2700K, 3000K, 3500K, 4000K, 5000K, Dim-to-Warm	5% Phase Cut LE/TE Dimming, 120V 60Hz	Matte White

Accessories	
Mounting Frames **MF4RC** = 4" Round Mounting Frame with Drywall Collar **HL4RSMF** = 4" Round-to-Square Mounting Frame **MF6RC** = 6" Round Mounting Frame with Drywall Collar **HL6RSMF** = 6" Round-to-Square Mounting Frame	**Extension Cables** **HLB06BLEEC** = 6 ft. Extension Cable **HLB12BLEEC** = 12 ft. Extension Cable **HLB20BLEEC** = 20 ft. Extension Cable

Dimensional and Mounting Details

RA4-DM

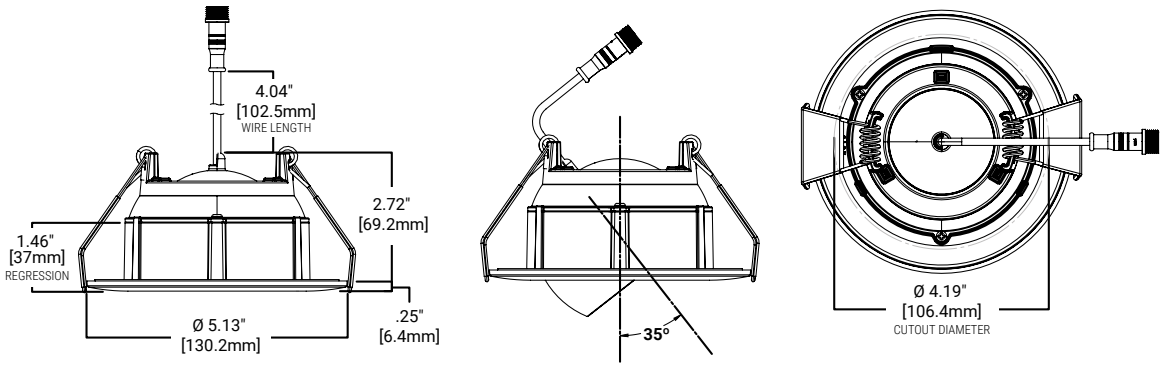

RA6-DM

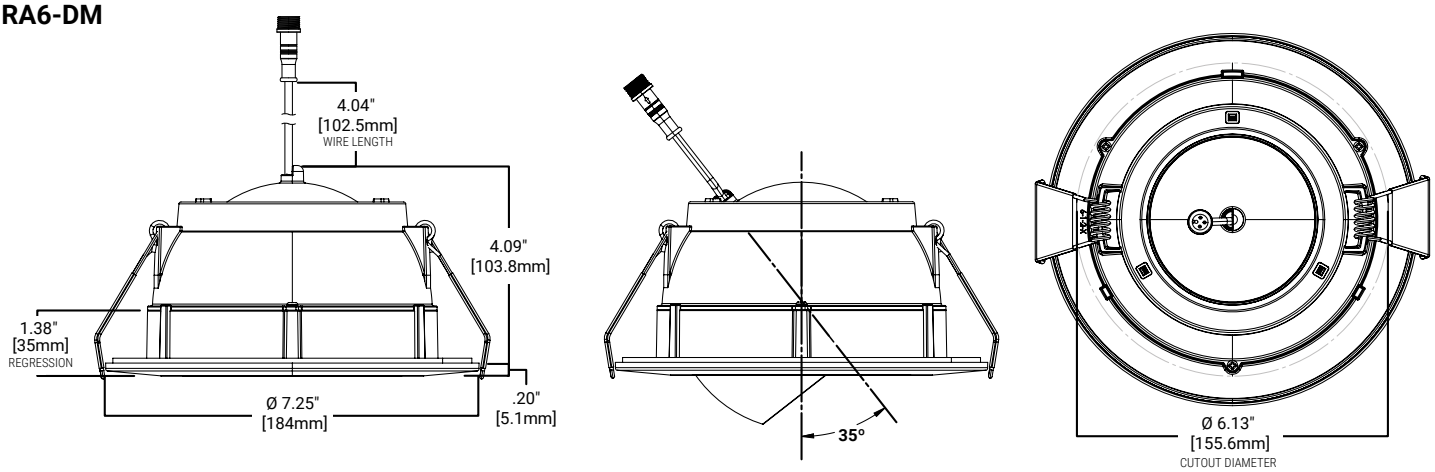

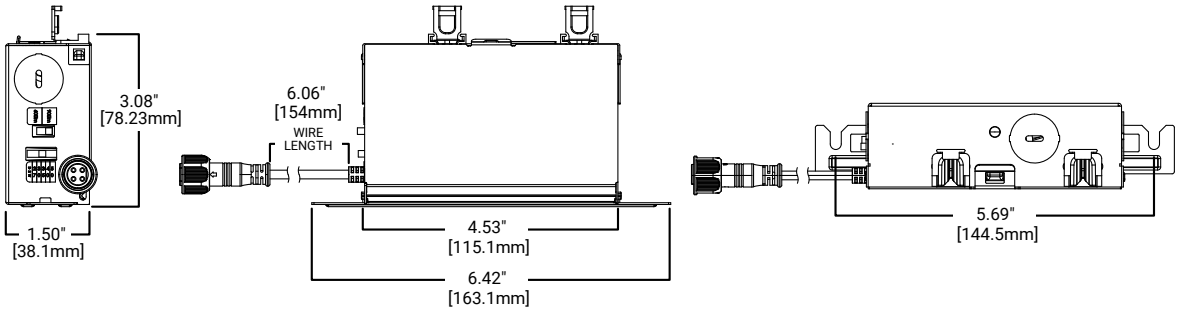

Product Specifications

Selectable System
- Use the 6-position color selector switch to choose between: Dim-to-Warm (3000K dims to 1800K), 2700K, 3000K, 3500K, 4000K, and 5000K
- Use the lumen select switch to choose the preferred brightness level

Module – Trim
- Module construction includes LED array, heat sink, reflector, lens, baffle and trim ring
- Regressed baffle
- Heat sink designed to conduct heat away from the LED array, keeping the junction temperatures below specified maximums, even when installed in insulated ceiling environments
- Adjustable gimbal tilts up to 35° and rotates up to 360°

LED Array
- Mid power LED array provides a uniform source with high efficiency and no pixilation
- 90 CRI minimum, R9 greater than 50
- Color accuracy at 4 SDCM in between Endpoints, provide color accuracy and uniformity.
- Factory default color temperature (CCT) is set to soft white (3000K)

Optical Assembly
- Regressed lens
- Impact-resistant polycarbonate
- Convex form and lamp-like appearance

Driver
- Integral 120V 60 Hz constant current driver provides noise free operation
- Inline electrical quick connect and E26 adapter (provided) provides mains connections
- Continuous, flicker-free phase cut (leading-edge/trailing-edge - LE/TE) dimming from 100% to 5% output with compatible dimmers
- *See the RA Dimming Guide for compatible dimmers

Retention
- No housing or junction box required
- The included remote junction box may be used in direct contact with insulation
- Installer must cut template out of drywall and install into aperture with the clips compressed
- When released, the spring clips will rest on to the back side of the drywall holding the fixture in place
- Not for installation in recessed cans
- For new construction applications, use HALO Canless Mounting Frames prior to drywall installation

Gasket
- Closed cell gaskets achieve restrictive airflow requirements without additional caulking

Compliance
- UL Certified US and Canada Type IC suitable for direct contact with air permeable insulation
- Damp location listed. Not recommended for use in direct contact with spray foam insulation, reference NEMA LSD57-2013
- Airtight certified per ASTM-E283
- EMI/RFI emissions per FCC 47CFR Part 15 consumer limits
- Contains no mercury or lead and RoHS compliant
- Photometric testing in accordance with IES LM-79-08
- Lumen maintenance projections in accordance with IES LM-80-08 and TM-21-11
- Can be used for State of California Title 24 high efficacy luminaire compliance. Complies with Title 24 JA8-2022-E.
- Can be used International Energy Conservation Code (IECC) high efficiency luminaire compliance.
- ENERGY STAR® listed, reference database for current listings

Warranty
- Five year limited warranty, consult website for details. www.cooperlighting.com/warranty

Energy Data

RA4LS9FSD2W1EWHDM - 3000K

Lumens	600/900
Input Voltage	120V
Input current	0.08A/0.05A
Input Power	9.3W/6.1W
Efficiency	76.64%/77.33%
Inrush(A)	1.94
THD	16/12.2
PF	0.949/0.975
Sound Rating	<=22dba

Catalog Number	CCT	Watts	lumens	LPW	CRI
RA4LS9FSD2W1EWHDM 600 Lumens	2700K	6.1	615	100.8	92
	3000K	6.2	620	100.0	93
	3500K	6.1	635	104.1	93
	4000K	6.1	630	103.3	93
	5000K	6.1	630	103.3	93

Catalog Number	CCT	Watts	lumens	LPW	CRI
RA4LS9FSD2W1EWHDM 900 Lumens	2700K	9.2	885	96.2	92
	3000K	9.2	920	100.0	93
	3500K	9.4	910	96.8	93
	4000K	9.3	905	97.3	93
	5000K	9.3	900	96.8	93

RA6LS9FSD2W1EWHDM - 3000K

Lumens	600/1000
Input Voltage	120V
Input current	0.053A/0.079A
Input Power	6.13W/9.32W
Efficiency	76.64%/77.33%
Inrush(A)	1.94
THD	16/12.2
PF	0.949/0.975
Sound Rating	<=22dba

Catalog Number	CCT	Watts	lumens	LPW	CRI
RA6LS9FSD2W1EWHDM 600 Lumens	2700K	6.3	650	103.2	93
	3000K	6.3	630	100.0	93
	3500K	6.3	670	106.3	93
	4000K	6.3	675	107.1	93
	5000K	6.3	675	107.1	93

Catalog Number	CCT	Watts	lumens	LPW	CRI
RA6LS9FSD2W1EWHDM 900 Lumens	2700K	9.6	920	95.8	93
	3000K	9.5	950	100.0	93
	3500K	9.6	950	99.0	93
	4000K	9.6	960	100.0	93
	5000K	9.5	955	100.5	93

Photometric Data

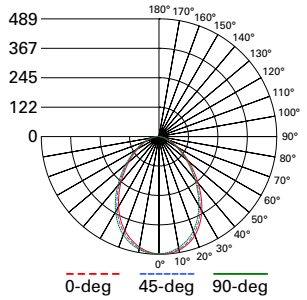

RA4LS9FSD2W1EWHDM-900lm-3000K

Spacing criterion:
(0-180) 1.09 | (90-270) 1.09 | (Diagonal) 1.14
Beam Angle: 81°
Field Angle: 141°
Lumens: 920
Input Watts: 9.2 W
Efficacy: 100 LPW
UGR: 20
Test Report: P710078

Zonal Lumen	Lumens	% Lumens
0-30	351	38.2
0-40	537	58.3
0-60	807	87.7
0-90	920	100

TM-30-15	Rf = 91
	Rg = 103
CRI/CIE	Ra = 94.6
	R9 = 74.6

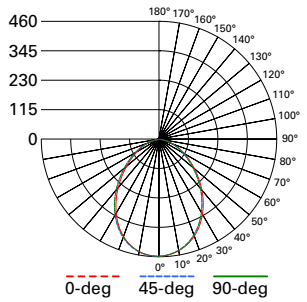

RA6LS9FSD2W1EWHDM-900lm-3000K

Spacing criterion:
(0-180) 1.12 | (90-270) 1.12 | (Diagonal) 1.19
Beam Angle: 86°
Field Angle: 147°
Lumens: 950
Input Watts: 9.5 W
Efficacy: 100 LPW
UGR: 19
Test Report: P710098

Zonal Lumen	Lumens	% Lumens
0-30	336	35.3
0-40	522	55
0-60	816	85.9
0-90	950	100

TM-30-15	Rf = 93
	Rg = 101
CRI/CIE	Ra = 96.9
	R9 = 81.3

Cooper Lighting Solutions
1121 Highway 74 South
Peachtree City, GA 30269
P: 770-486-4800
www.cooperlighting.com

© 2023 Cooper Lighting Solutions
All Rights Reserved.

Specifications and dimensions subject to change without notice.

Project		Catalog #		Type	
Prepared by		Notes		Date	

HALO

RA Baffle Adjustable Recessed Canless LED Downlight

4" and 5/6" Baffle Adjustable Recessed Canless LED Downlights mount directly to the ceiling and provide up to 35° of tilt and 360° of rotation

Typical Applications

Residential

Interactive Menu

- Order Information page 2
- Product Specifications page 3
- Energy Data page 3
- Photometric Data page 4
- Product Warranty

Product Certification

Refer to ENERGY STAR® Certified Products List.
Can be used to comply with California Title 24 High Efficacy requirements.
Certified to California Appliance Efficiency Database under JA8.

Product Features

Top Product Features

- Available in 4" and 6" LED trims mount directly to ceilings - no housing required
- Adjustable gimbal tilts up to 35° and rotates 360° to aim light where it's needed
- 6-Position Switch: 5 Color Field-SeleCCTable soft white to daylight (2700K, 3000K, 3500K, 4000K, 5000K) + Dim-to-Warm (3000K dims to 1800K)
- Selectable Lumen Switch: Choose between 600/900 lumens
- 5% phase cut LE/TE dimming (120V input) with compatible controls (reference the RA Dimming Guide)

Dimensional and Mounting Details

additional product diagrams

RA4-DM

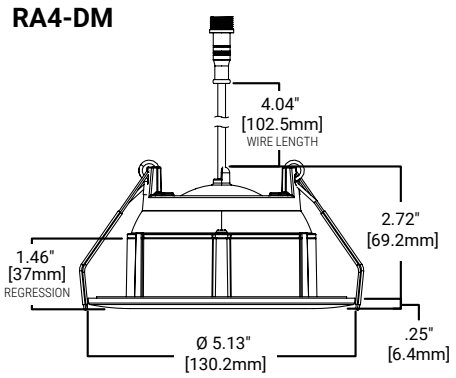

RA6-DM

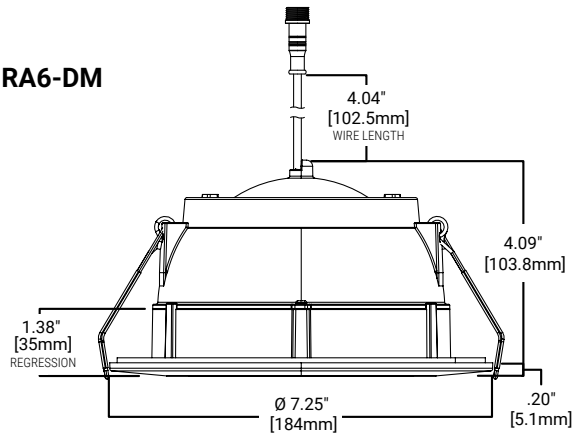

Order Information

Catalog Number	Description	Lumens (nominal)	CRI	CCT	Driver	Finish
RA4LS9FSD2W1EWHDM	4" Adjustable Canless LED Downlight	600/900 Selectable Lumens	90+CRI	6-Color Field-SeleCCTable: 2700K, 3000K, 3500K, 4000K, 5000K, Dim-to-Warm	5% Phase Cut LE/TE Dimming, 120V 60Hz	Matte White
RA6LS9FSD2W1EWHDM	6" Adjustable Canless LED Downlight	600/900 Selectable Lumens	90+CRI	6-Color Field-SeleCCTable: 2700K, 3000K, 3500K, 4000K, 5000K, Dim-to-Warm	5% Phase Cut LE/TE Dimming, 120V 60Hz	Matte White

Accessories	
Mounting Frames **MF4RC** = 4" Round Mounting Frame with Drywall Collar **HL4RSMF** = 4" Round-to-Square Mounting Frame **MF6RC** = 6" Round Mounting Frame with Drywall Collar **HL6RSMF** = 6" Round-to-Square Mounting Frame	**Extension Cables** **HLB06BLEEC** = 6 ft. Extension Cable **HLB12BLEEC** = 12 ft. Extension Cable **HLB20BLEEC** = 20 ft. Extension Cable

Dimensional and Mounting Details

RA4-DM

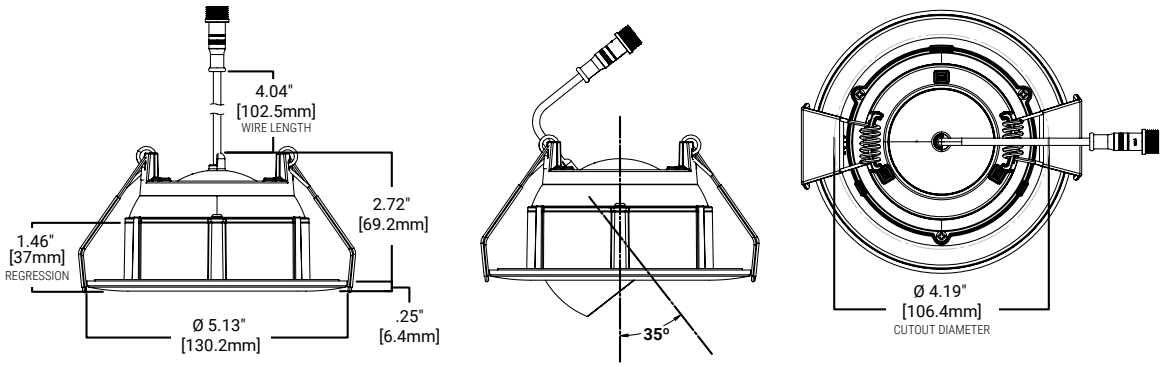

RA6-DM

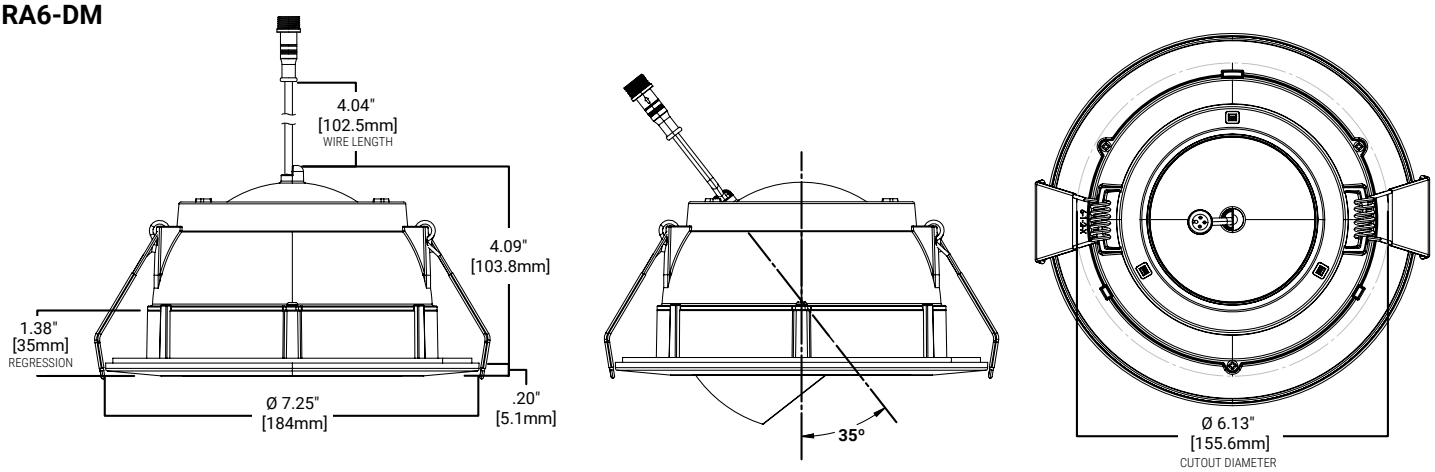

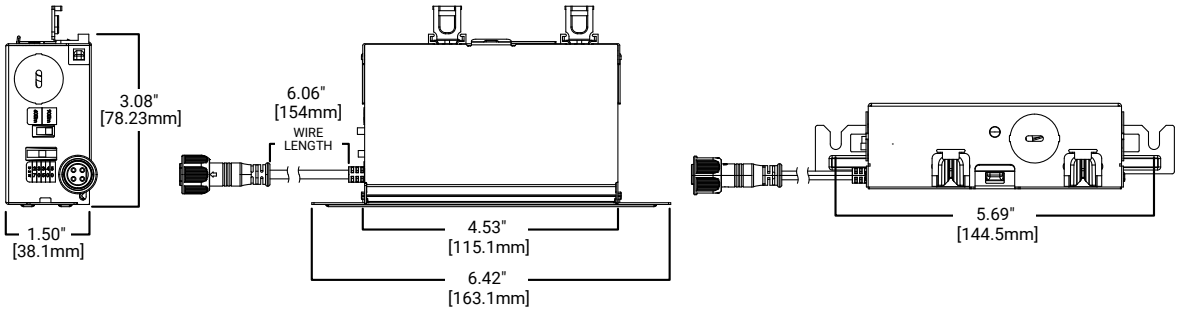

Product Specifications

Selectable System
- Use the 6-position color selector switch to choose between: Dim-to-Warm (3000K dims to 1800K), 2700K, 3000K, 3500K, 4000K, and 5000K
- Use the lumen select switch to choose the preferred brightness level

Module – Trim
- Module construction includes LED array, heat sink, reflector, lens, baffle and trim ring
- Regressed baffle
- Heat sink designed to conduct heat away from the LED array, keeping the junction temperatures below specified maximums, even when installed in insulated ceiling environments
- Adjustable gimbal tilts up to 35° and rotates up to 360°

LED Array
- Mid power LED array provides a uniform source with high efficiency and no pixilation
- 90 CRI minimum, R9 greater than 50
- Color accuracy at 4 SDCM in between Endpoints, provide color accuracy and uniformity.
- Factory default color temperature (CCT) is set to soft white (3000K)

Optical Assembly
- Regressed lens
- Impact-resistant polycarbonate
- Convex form and lamp-like appearance

Driver
- Integral 120V 60 Hz constant current driver provides noise free operation
- Inline electrical quick connect and E26 adapter (provided) provides mains connections
- Continuous, flicker-free phase cut (leading-edge/trailing-edge - LE/TE) dimming from 100% to 5% output with compatible dimmers
- *See the RA Dimming Guide for compatible dimmers

Retention
- No housing or junction box required
- The included remote junction box may be used in direct contact with insulation
- Installer must cut template out of drywall and install into aperture with the clips compressed
- When released, the spring clips will rest on to the back side of the drywall holding the fixture in place
- Not for installation in recessed cans
- For new construction applications, use HALO Canless Mounting Frames prior to drywall installation

Gasket
- Closed cell gaskets achieve restrictive airflow requirements without additional caulking

Compliance
- UL Certified US and Canada Type IC suitable for direct contact with air permeable insulation
- Damp location listed. Not recommended for use in direct contact with spray foam insulation, reference NEMA LSD57-2013
- Airtight certified per ASTM-E283
- EMI/RFI emissions per FCC 47CFR Part 15 consumer limits
- Contains no mercury or lead and RoHS compliant
- Photometric testing in accordance with IES LM-79-08
- Lumen maintenance projections in accordance with IES LM-80-08 and TM-21-11
- Can be used for State of California Title 24 high efficacy luminaire compliance. Complies with Title 24 JA8-2022-E.
- Can be used International Energy Conservation Code (IECC) high efficiency luminaire compliance.
- ENERGY STAR® listed, reference database for current listings

Warranty
- Five year limited warranty, consult website for details. www.cooperlighting.com/warranty

Energy Data

RA4LS9FSD2W1EWHDM - 3000K

Lumens	600/900
Input Voltage	120V
Input current	0.08A/0.05A
Input Power	9.3W/6.1W
Efficiency	76.64%/77.33%
Inrush(A)	1.94
THD	16/12.2
PF	0.949/0.975
Sound Rating	<=22dba

Catalog Number	CCT	Watts	lumens	LPW	CRI
RA4LS9FSD2W1EWHDM 600 Lumens	2700K	6.1	615	100.8	92
	3000K	6.2	620	100.0	93
	3500K	6.1	635	104.1	93
	4000K	6.1	630	103.3	93
	5000K	6.1	630	103.3	93

Catalog Number	CCT	Watts	lumens	LPW	CRI
RA4LS9FSD2W1EWHDM 900 Lumens	2700K	9.2	885	96.2	92
	3000K	9.2	920	100.0	93
	3500K	9.4	910	96.8	93
	4000K	9.3	905	97.3	93
	5000K	9.3	900	96.8	93

RA6LS9FSD2W1EWHDM - 3000K

Lumens	600/1000
Input Voltage	120V
Input current	0.053A/0.079A
Input Power	6.13W/9.32W
Efficiency	76.64%/77.33%
Inrush(A)	1.94
THD	16/12.2
PF	0.949/0.975
Sound Rating	<=22dba

Catalog Number	CCT	Watts	lumens	LPW	CRI
RA6LS9FSD2W1EWHDM 600 Lumens	2700K	6.3	650	103.2	93
	3000K	6.3	630	100.0	93
	3500K	6.3	670	106.3	93
	4000K	6.3	675	107.1	93
	5000K	6.3	675	107.1	93

Catalog Number	CCT	Watts	lumens	LPW	CRI
RA6LS9FSD2W1EWHDM 900 Lumens	2700K	9.6	920	95.8	93
	3000K	9.5	950	100.0	93
	3500K	9.6	950	99.0	93
	4000K	9.6	960	100.0	93
	5000K	9.5	955	100.5	93

Photometric Data

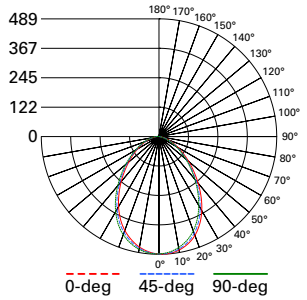

RA4LS9FSD2W1EWHDM-900lm-3000K

Spacing criterion:
(0-180) 1.09 | (90-270) 1.09 | (Diagonal) 1.14
Beam Angle: 81°
Field Angle: 141°
Lumens: 920
Input Watts: 9.2 W
Efficacy: 100 LPW
UGR: 20
Test Report: P710078

Zonal Lumen	Lumens	% Lumens
0-30	351	38.2
0-40	537	58.3
0-60	807	87.7
0-90	920	100

TM-30-15	Rf = 91
	Rg = 103
CRI/CIE	Ra = 94.6
	R9 = 74.6

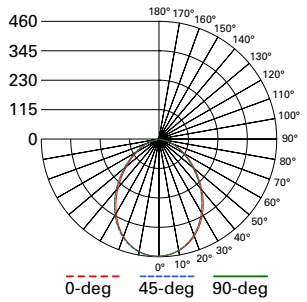

RA6LS9FSD2W1EWHDM-900lm-3000K

Spacing criterion:
(0-180) 1.12 | (90-270) 1.12 | (Diagonal) 1.19
Beam Angle: 86°
Field Angle: 147°
Lumens: 950
Input Watts: 9.5 W
Efficacy: 100 LPW
UGR: 19
Test Report: P710098

Zonal Lumen	Lumens	% Lumens
0-30	336	35.3
0-40	522	55
0-60	816	85.9
0-90	950	100

TM-30-15	Rf = 93
	Rg = 101
CRI/CIE	Ra = 96.9
	R9 = 81.3

Cooper Lighting Solutions
1121 Highway 74 South
Peachtree City, GA 30269
P: 770-486-4800
www.cooperlighting.com

© 2023 Cooper Lighting Solutions
All Rights Reserved.

Specifications and dimensions subject to change without notice.