369816g 1 06.27.19

# Lutron Smart Bridge and Lutron Smart Bridge PRO

The Smart Bridge and Smart Bridge PRO allow for setup, control, and monitoring of Caséta Wireless devices and Lutron wireless shades from a smartphone or tablet using the Lutron App[1].

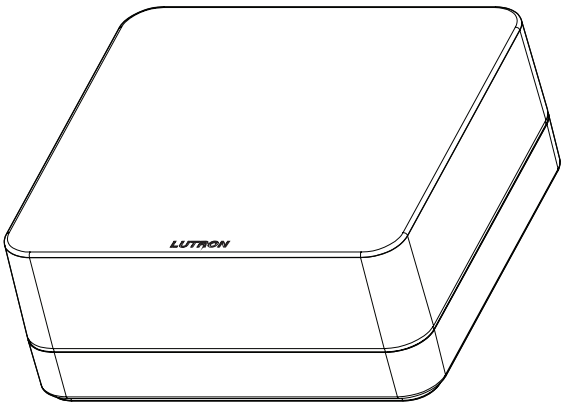


Lutron Smart Bridge and Smart Bridge PRO

## Models Available

| | | |
|---|---|---|
| L-BDG2-WH | 5 V⎓ | 300 mA (Lutron Smart Bridge) |
| L-BDG2-WH-C[2] | 5 V⎓ | 300 mA (Lutron Smart Bridge) |
| L-BDGPRO2-WH | 5 V⎓ | 300 mA (Lutron Smart Bridge PRO) |
| L-BDGPRO2-WH-C[2] | 5 V⎓ | 300 mA (Lutron Smart Bridge PRO) |

[1] The Lutron App is required for setup and use with the Smart Bridge/Smart Bridge PRO. The Lutron App is compatible with iOS® devices version 8.0 or later and Android™ devices 4.1 or later.

[2] Canadian packaged product.



| Job Name: | Model Numbers: | |
|---|---|---|
| | | |
| Job Number: | | |

| Features | Smart Bridge | Smart Bridge PRO |
|---|---|---|
| Supports up to 75 wireless devices (Caséta Wireless dimmers, plug-in dimmers, and switches, Pico remote controls, wireless shades). Smart Bridge/Smart Bridge PRO counts as one device. | √ | √ |
| Programmed via the Lutron App (available for iOS® and Android™). | √ | √ |
| Scene control via the Lutron App. | √ | √ |
| Timeclock scheduling of daily events via the Lutron App. | √ | √ |
| Connects to Wi-Fi router via Ethernet. | √ | √ |
| Local device operation will continue to function if internet connection is lost or Smart Bridge/Smart Bridge PRO is powered down or not communicating. | √ | √ |
| System access from anywhere in the world using the Lutron App. | √ | √ |
| Supports Caséta Wireless devices, Serena shades, and Pico remote controls. | √ | √ |
| Control outside the app via widgets (iOS® and Android™). | √ | √ |
| Supports Geofencing from the Lutron App. | √ | √ |
| Control from *Apple Watch*. | √ | √ |
| Supports *Siri* and *Apple HomeKit* technology.[1] | √ | √ |
| Supports Sivoia QS, Triathlon and select Sivoia QS Wireless shades (venetian and horizontal sheer blinds are not supported). | | √ |
| Integration with select A/V and security systems (see www.casetawireless.com/integration for details). | | √ |

[1] HomeKit requires an iPhone, iPad, or iPod touch with iOS 8.1 or later. Controlling HomeKit-enabled accessories from home also requires an Apple TV (3rd generation or later) with Apple TV software 7.0 or later. Smart Bridge enables plug-in lamp dimmers to work with HomeKit technology. See www.casetawireless.com/Support for more details.



| Job Name: | Model Numbers: | |
|---|---|---|
| Job Number: | | |

## Specifications (Smart Bridge/Smart Bridge PRO)

### Regulatory Approvals

- cULus Listed
- FCC approved. Complies with the limits of a Class B digital device, pursuant to Part 15 of the FCC rules
- IC certified
- COFETEL certified

### Power

- 5 V⎓ 300 mA
- Power Supply (included): 5 V⎓ 550 mA, cable length 6 ft (1.83 m)

### Typical Power Consumption

- Lutron Smart Bridge: 1.3 W
- Lutron Smart Bridge PRO: 1.3 W
- Test Conditions: LED on, Ethernet cable plugged in, powered by the 5 V⎓ adapter

### Environment

- Ambient operating temperature: 32 °F to 104 °F (0 °C to 40 °C)
- 0% to 90% humidity, non-condensing
- Indoor use only

### Communications

- All devices must be located within 30 ft (9 m) of Smart Bridge/Smart Bridge PRO
- System devices operate on frequencies between 431.0 MHz to 437 MHz
- Internet connection required for initial setup and to maintain system date/time and receive periodic firmware updates

### Protection

- Tested to withstand electrostatic discharge without damage or memory loss in accordance with IEC 61000-4-2
- Tested to withstand surge voltages without damage or loss of operation, in accordance with IEEE C62.41-1991

### Power Failure Memory

- Should power be interrupted, the Smart Bridge/Smart Bridge PRO will return to its previous state when power is restored

### Connections

- Ethernet: 3 ft (0.92 m) cable included (for internet and Lutron App connection)
- USB (power only)



| Job Name: | Model Numbers: | |
|---|---|---|
| | | |
| Job Number: | | |

## Dimensions (Smart Bridge / Smart Bridge PRO)

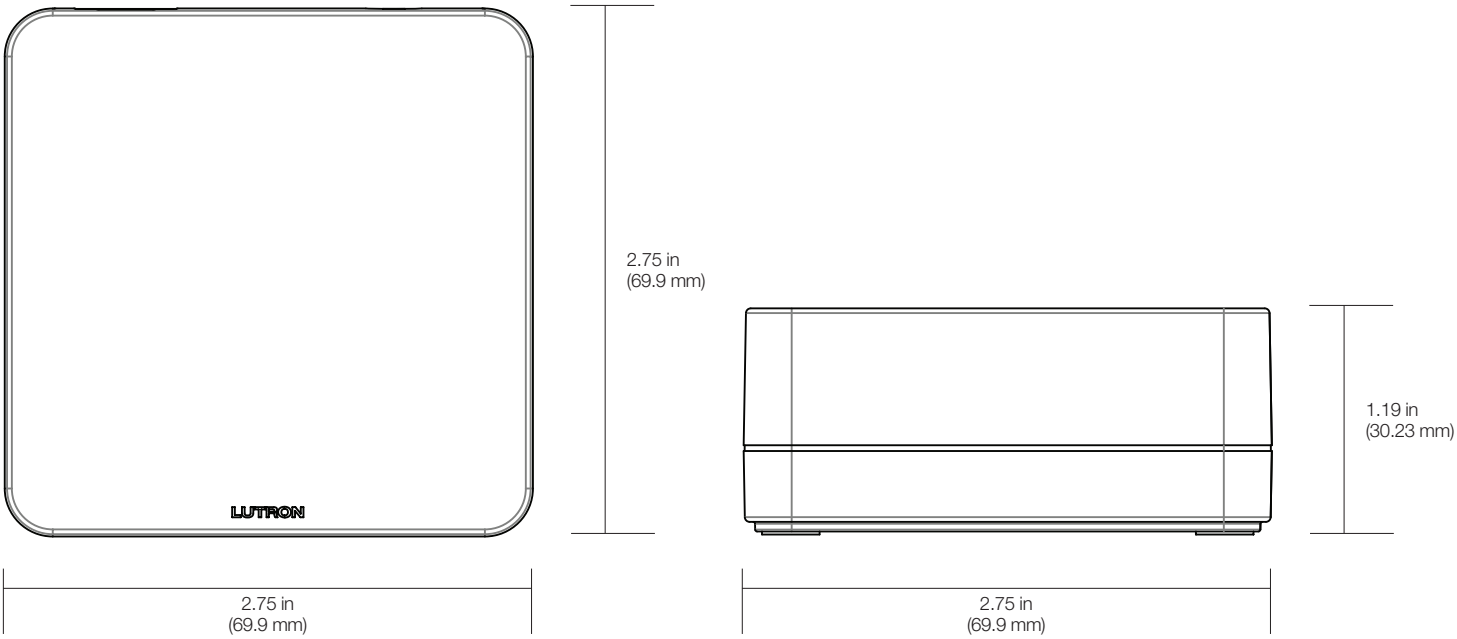




| Job Name: | Model Numbers: | |
|---|---|---|
| | | |
| Job Number: | | |

## RF Range (Smart Bridge/Smart Bridge PRO)

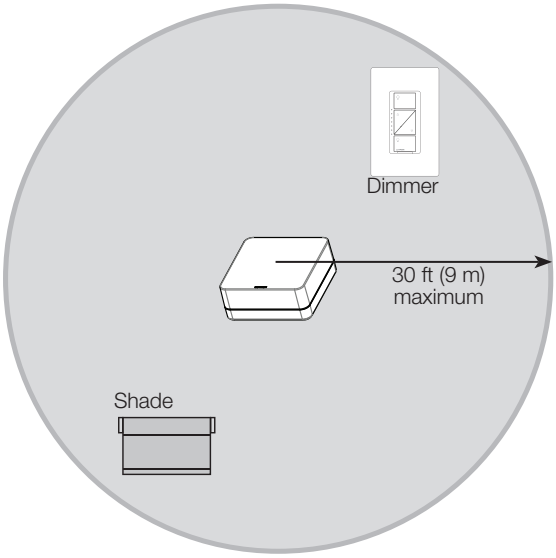


All devices must be located within 30 ft (9 m) of Smart Bridge/Smart Bridge PRO

## Connections (Smart Bridge and Smart Bridge PRO)

**Back View**

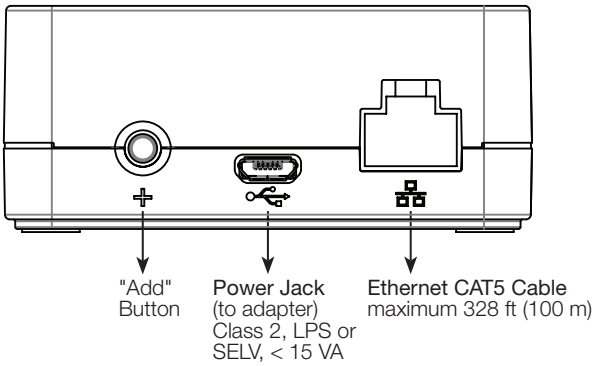


**Ethernet Pin Numbering**

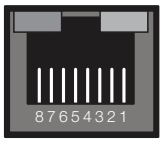


| Ethernet | Pin # |
|---|---|
| T+Ve | 1 |
| T–Ve | 2 |
| R+Ve | 3 |
| R–Ve | 6 |

Lutron, Lutron, Caséta, Pico, Serena, Triathlon, and Sivoia are trademarks or registered trademarks of Lutron Electronics Co., Inc. in the US and/or other countries. IOS is a registered trademark of Cisco in the U.S. and other countries and is used under license. Android is a trademark of Google Inc. Apple, Apple TV, iPad, iPod touch, iPhone, and Siri are registered trademarks and Apple Watch and HomeKit are trademarks of Apple Inc., registered in the U.S. and other countries.



| Job Name: | Model Numbers: | |
|---|---|---|
| | | |
| Job Number: | | |

369816g 1 06.27.19

# Lutron Smart Bridge and Lutron Smart Bridge PRO

The Smart Bridge and Smart Bridge PRO allow for setup, control, and monitoring of Caséta Wireless devices and Lutron wireless shades from a smartphone or tablet using the Lutron App[1].

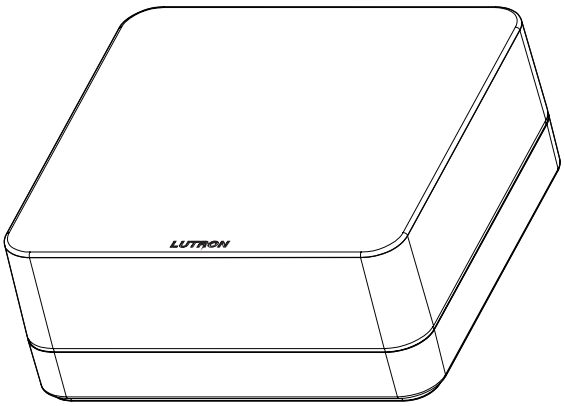


Lutron Smart Bridge and Smart Bridge PRO

## Models Available

| | | |
|---|---|---|
| L-BDG2-WH | 5 V⎓ | 300 mA (Lutron Smart Bridge) |
| L-BDG2-WH-C[2] | 5 V⎓ | 300 mA (Lutron Smart Bridge) |
| L-BDGPRO2-WH | 5 V⎓ | 300 mA (Lutron Smart Bridge PRO) |
| L-BDGPRO2-WH-C[2] | 5 V⎓ | 300 mA (Lutron Smart Bridge PRO) |

[1] The Lutron App is required for setup and use with the Smart Bridge/Smart Bridge PRO. The Lutron App is compatible with iOS® devices version 8.0 or later and Android™ devices 4.1 or later.

[2] Canadian packaged product.



| Job Name: | Model Numbers: | |
|---|---|---|
| | | |
| Job Number: | | |

| Features | Smart Bridge | Smart Bridge PRO |
|---|---|---|
| Supports up to 75 wireless devices (Caséta Wireless dimmers, plug-in dimmers, and switches, Pico remote controls, wireless shades). Smart Bridge/Smart Bridge PRO counts as one device. | √ | √ |
| Programmed via the Lutron App (available for iOS® and Android™). | √ | √ |
| Scene control via the Lutron App. | √ | √ |
| Timeclock scheduling of daily events via the Lutron App. | √ | √ |
| Connects to Wi-Fi router via Ethernet. | √ | √ |
| Local device operation will continue to function if internet connection is lost or Smart Bridge/Smart Bridge PRO is powered down or not communicating. | √ | √ |
| System access from anywhere in the world using the Lutron App. | √ | √ |
| Supports Caséta Wireless devices, Serena shades, and Pico remote controls. | √ | √ |
| Control outside the app via widgets (iOS® and Android™). | √ | √ |
| Supports Geofencing from the Lutron App. | √ | √ |
| Control from *Apple Watch*. | √ | √ |
| Supports *Siri* and *Apple HomeKit* technology.[1] | √ | √ |
| Supports Sivoia QS, Triathlon and select Sivoia QS Wireless shades (venetian and horizontal sheer blinds are not supported). | | √ |
| Integration with select A/V and security systems (see www.casetawireless.com/integration for details). | | √ |

[1] HomeKit requires an iPhone, iPad, or iPod touch with iOS 8.1 or later. Controlling HomeKit-enabled accessories from home also requires an Apple TV (3rd generation or later) with Apple TV software 7.0 or later. Smart Bridge enables plug-in lamp dimmers to work with HomeKit technology. See www.casetawireless.com/Support for more details.



| Job Name: | Model Numbers: | |
|---|---|---|
| Job Number: | | |

## Specifications (Smart Bridge/Smart Bridge PRO)

### Regulatory Approvals

- cULus Listed
- FCC approved. Complies with the limits of a Class B digital device, pursuant to Part 15 of the FCC rules
- IC certified
- COFETEL certified

### Power

- 5 V⎓ 300 mA
- Power Supply (included): 5 V⎓ 550 mA, cable length 6 ft (1.83 m)

### Typical Power Consumption

- Lutron Smart Bridge: 1.3 W
- Lutron Smart Bridge PRO: 1.3 W
- Test Conditions: LED on, Ethernet cable plugged in, powered by the 5 V⎓ adapter

### Environment

- Ambient operating temperature: 32 °F to 104 °F (0 °C to 40 °C)
- 0% to 90% humidity, non-condensing
- Indoor use only

### Communications

- All devices must be located within 30 ft (9 m) of Smart Bridge/Smart Bridge PRO
- System devices operate on frequencies between 431.0 MHz to 437 MHz
- Internet connection required for initial setup and to maintain system date/time and receive periodic firmware updates

### Protection

- Tested to withstand electrostatic discharge without damage or memory loss in accordance with IEC 61000-4-2
- Tested to withstand surge voltages without damage or loss of operation, in accordance with IEEE C62.41-1991

### Power Failure Memory

- Should power be interrupted, the Smart Bridge/Smart Bridge PRO will return to its previous state when power is restored

### Connections

- Ethernet: 3 ft (0.92 m) cable included (for internet and Lutron App connection)
- USB (power only)



| Job Name: | Model Numbers: | |
|---|---|---|
| | | |
| Job Number: | | |

## Dimensions (Smart Bridge / Smart Bridge PRO)

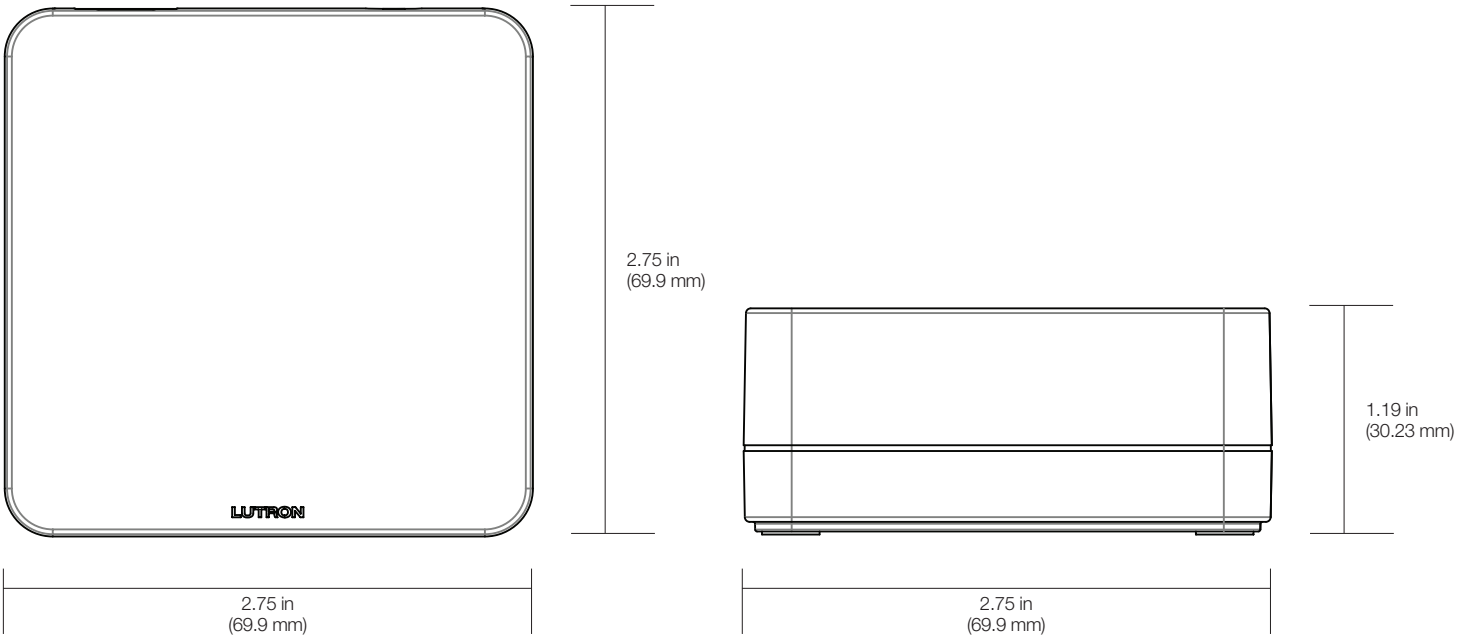




| Job Name: | Model Numbers: | |
|---|---|---|
| | | |
| Job Number: | | |

## RF Range (Smart Bridge/Smart Bridge PRO)

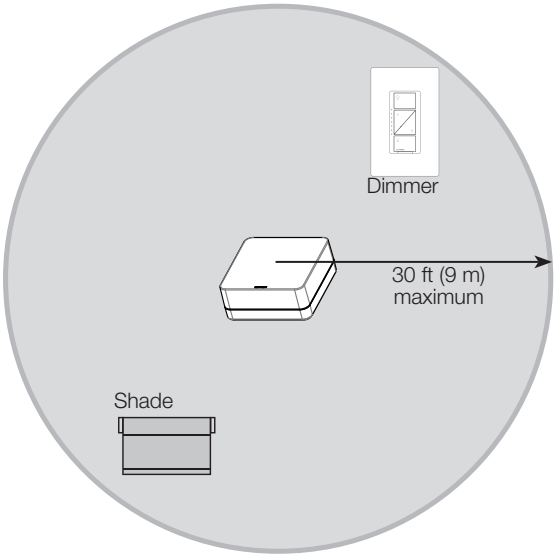


All devices must be located within 30 ft (9 m) of Smart Bridge/Smart Bridge PRO

## Connections (Smart Bridge and Smart Bridge PRO)

**Back View**

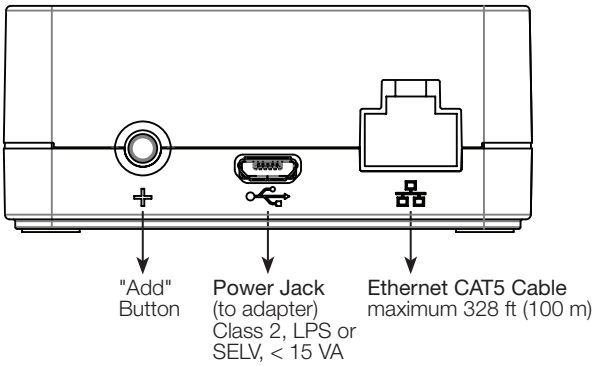


**Ethernet Pin Numbering**

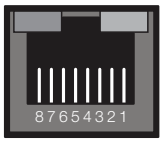


| Ethernet | Pin # |
|---|---|
| T+Ve | 1 |
| T–Ve | 2 |
| R+Ve | 3 |
| R–Ve | 6 |

Lutron, Lutron, Caséta, Pico, Serena, Triathlon, and Sivoia are trademarks or registered trademarks of Lutron Electronics Co., Inc. in the US and/or other countries. IOS is a registered trademark of Cisco in the U.S. and other countries and is used under license. Android is a trademark of Google Inc. Apple, Apple TV, iPad, iPod touch, iPhone, and Siri are registered trademarks and Apple Watch and HomeKit are trademarks of Apple Inc., registered in the U.S. and other countries.



| Job Name: | Model Numbers: | |
|---|---|---|
| | | |
| Job Number: | | |