# Lumark

## DESCRIPTION

The Night Falcon™ LED floodlight luminaire combines high-efficiency optics, superior thermal management and energy efficiency in a cost-effective solution. The compact, robust design incorporates a separate driver compartment for maximum heat dissipation to insure longevity of both the fixture and the LEDs. The Night Falcon luminaire uses precision engineered optics delivering superior uniformity and excellent illumination to the targeted application. Typical applications include area lighting for security, building facade lighting, accent and signage lighting in both commercial and industrial applications. The Night Falcon luminaire is UL/cUL listed for wet locations and is IP66 rated.

| | | |
|---|---|---|
| **Catalog #** | | **Type** |
| **Project** | | |
| **Comments** | | **Date** |
| **Prepared by** | | |

## SPECIFICATION FEATURES

### Construction
Heavy-duty, die-cast aluminum housing, driver compartment and driver housing door. A separate driver compartment and external fins provide optimal thermal management that result in longer LED and driver life.The housing, driver compartment and optical chamber are IP66 rated. Access to the driver for maintenance is achieved with a removable driver door using pan head screws. A one-piece silicone gasket seals the door to the fixture housing. The fixture is 3G vibration rated (ANSI C136.31) to ensure durability in area and site lighting applications. Suitable for mounting within 4′ (1.2m) of the ground.

### Optics
The LED chamber incorporates a vacuum metalized reflector that provides high-efficiency illumination. Optics are precisely designed to shape the the NEMA 6H x 6V wide distribution and the 3H x 3V spot distribution, maximizing efficiency and application spacing. Clear glass tempered lens with full circumference form-in-place silicone gasket protects the optics from damage. Offered standard in 4000K (+/- 275K) CCT and minimum 70 CRI. Optional 5700K, 5000K and 3000K CCT and minimum 70 CRI are available.

### Electrical
LED driver is mounted to the removable die-cast aluminum door for optimal heat sinking and ease of maintenance. 120-277V 50/60Hz, 347V 60Hz or 480V 60Hz operation. Integral 6kV surge is standard.10kV/10kA common- and differential- mode surge protection available as an option. 0-10V dimming driver is available to accommodate controls capability such as dimming and occupancy. Standard NEMA 3-PIN twistlock photocontrol receptacle and NEMA 7-PIN twistlock photocontrol receptacles are available as options. Suitable for ambient temperatures from -40°C to 40°C. Optional 50°C HA (high ambient) available. 92% lumen maintenance greater than 60,000 hours per IESNA TM-21 at 25°C.

### Accessories
Heavy-duty steel top and side visors control glare and spill light. 1/8″ thick UV stabilized vandal guard shields glass lens from impact when mounted at low levels. Easy to install wire guard features a heavy-gauge welded construction with corrosion resistant polyester powder coat finish to protect glass from projected objects.

### Mounting
Mounting options include an integral die-cast aluminum slipfitter that is preset to a tilt of 45°. The knuckle base is supplied with a tooth lock adjustment that can be adjusted in 5° increments to provide flexibility in aiming the fixture from a variety of surfaces. Visual 15° adjustment indicators on the knuckle allow for 180° field rotation of the floodlight assembly. The slipfitter fits standard 2-3/8″-3″ O.D. tenon. The trunnion mounting includes a 3/16″ polyester powder coated galvanized steel trunnion with a 16/3 SOW cord. The trunnion mount uses an interlocking slide adjustment that is locked into place with a set screw.

### Finish
Housing and cast parts finished in five-stage super TGIC polyester powder coat paint, 2.5 mil nominal thickness for superior protection against fade and wear. Standard color is carbon bronze. Additional colors available in summit white, white, grey, bronze, black, dark platinum and graphite metallic. Consult your lighting representitive at Eaton for a complete selection of standard colors.

### Warranty
Five-year warranty.

# NFFLD
## NIGHT FALCON

**Solid State LED**

**FLOODLIGHT**

## DIMENSIONS

**Slipfitter Mount**

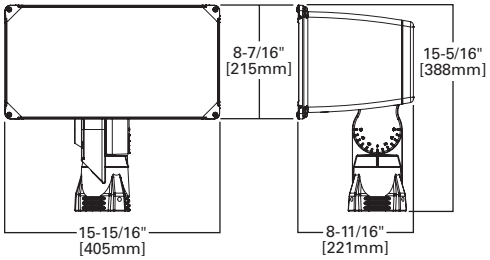


**Trunnion Mount**

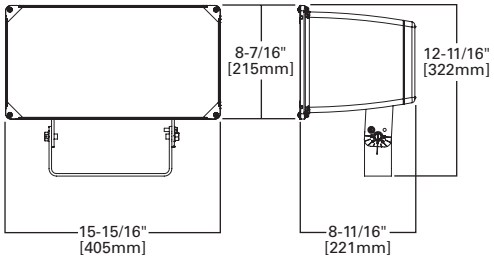


**Yoke Mount**

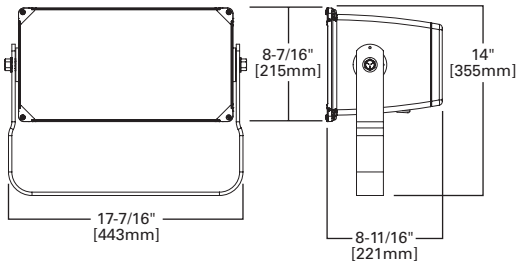


*www.designlights.org

## CERTIFICATION DATA
UL/cUL Wet Location Listed
IP66 Fixture and Optical Chamber
LM79/LM80 Compliant
3G Vibration Rated
RoHS Compliant
DesignLights Consortium® Qualified*

## ENERGY DATA
**Electronic LED Driver**
> 0.9 Power Factor
< 20% Total Harmonic Distortion
120V 50/60Hz, 347V/60Hz and 480V/60Hz
-40°C Minimum Ambient Temperature Rating
+40°C Maximum Ambient Temperature Rating

## EPA
**Effective Projected Area** (Sq. Ft.): 1.25

## SHIPPING DATA
**Approximate Net Weight:**
20 lbs. (9.09 kgs.)

## POWER AND LUMENS

| | 6x6 | | | | 3x3 | | | |
|---|---|---|---|---|---|---|---|---|
| **C25 LED** | **NFFLD-C25** | **NFFLD-C25-7030** | **NFFLD-C25-7050** | **NFFLD-C25-7060** | **NFFLD-C25** | **NFFLD-C25-7030** | **NFFLD-C25-7050** | **NFFLD-C25-7060** |
| Delivered Lumens | 10,530 | 10,122 | 10,383 | 10,217 | 10,272 | 9,874 | 10,128 | 9,967 |
| CCT (Kelvin) | 4000K | 3000K | 5000K | 5700K | 4000K | 3000K | 5000K | 5700K |
| CRI (Color Rendering Index) | 70 | 70 | 70 | 70 | 70 | 70 | 70 | 70 |
| Power Consumption (Watts) | 85W | 85W | 85W | 85W | 93W | 93W | 93W | 93W |
| **C40 LED** | **NFFLD-C40** | **NFFLD-C40-7030** | **NFFLD-C40-7050** | **NFFLD-C40-7060** | **NFFLD-C40** | **NFFLD-C40-7030** | **NFFLD-C40-7050** | **NFFLD-C40-7060** |
| Delivered Lumens | 16,932 | 16,268 | 16,686 | 16,421 | 14,113 | 13,567 | 13,916 | 13,694 |
| CCT (Kelvin) | 4000K | 3000K | 5000K | 5700K | 4000K | 3000K | 5000K | 5700K |
| CRI (Color Rendering Index) | 70 | 70 | 70 | 70 | 70 | 70 | 70 | 70 |
| Power Consumption (Watts) | 128W | 128W | 128W | 128W | 143W | 143W | 143W | 143W |
| **C55 LED** | **NFFLD-C55** | **NFFLD-C55-7030** | **NFFLD-C55-7050** | **NFFLD-C55-7060** | | | | |
| Delivered Lumens | 19,943 | 19,407 | 20,144 | 20,285 | | | | |
| CCT (Kelvin) | 4000K | 3000K | 5000K | 5700K | | | | |
| CRI (Color Rendering Index) | 70 | 70 | 70 | 70 | | | | |
| Power Consumption (Watts) | 145W | 145W | 145W | 145W | | | | |
| **C70 LED** | **NFFLD-C70** | **NFFLD-C70-7030** | **NFFLD-C70-7050** | **NFFLD-C70-7060** | | | | |
| Delivered Lumens | 23,797 | 23,157 | 24,037 | 24,205 | | | | |
| CCT (Kelvin) | 4000K | 3000K | 5000K | 5700K | | | | |
| CRI (Color Rendering Index) | 70 | 70 | 70 | 70 | | | | |
| Power Consumption (Watts) | 184W | 184W | 184W | 184W | | | | |

## CURRENT DRAW

| Voltage (V) | Model Series | | | | | |
|---|---|---|---|---|---|---|
| | 6x6 | | | | 3x3 | |
| | **NFFLD-C25** | **NFFLD-C40** | **NFFLD-C55** | **NFFLD-C70** | **NFFLD-C25** | **NFFLD-C40** |
| | **Current (A)** | **Current (A)** | **Current (A)** | **Current (A)** | **Current (A)** | **Current (A)** |
| 120V | 0.708 | 1.070 | 1.2299 | 1.5695 | 0.778 | 1.190 |
| 277V | 0.340 | 0.465 | 0.535 | 0.6726 | 0.340 | 0.531 |
| 347V | 0.251 | 0.377 | 0.4213 | 0.5334 | 0.271 | 0.419 |
| 480V | 0.195 | 0.273 | 0.3044 | 0.3831 | 0.207 | 0.320 |

## LUMEN MAINTENANCE

| Ambient Temperature | TM-21 Lumen Maintenance (60,000 Hours) | Theoretical L70 (Hours) |
|---|---|---|
| **6H x 6V (Wide)** | | |
| 25°C | > 94.55% | > 388,000 |
| 40°C | > 93.58% | > 327,000 |
| 50°C | -- | -- |
| **3H x 3V (Spot)** | | |
| 25°C | >92.18% | >262,000 |
| 40°C | >91.81% | >249,000 |

## LUMEN MULTIPLIER

| Ambient Temperature | Lumen Multiplier |
|---|---|
| 10°C | 1.03 |
| 15°C | 1.02 |
| 25°C | 1.00 |
| 40°C | 0.97 |
| 50°C | 0.96 |

## DRILLING PATTERNS

**Trunnion Mount**

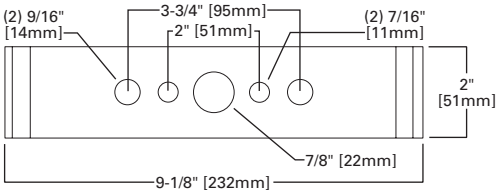


**Yoke Mount**

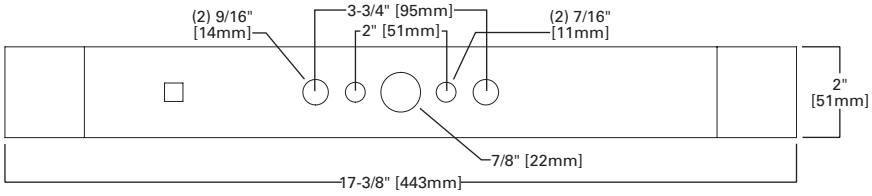


## OPTIONAL INTEGRATED SENSOR

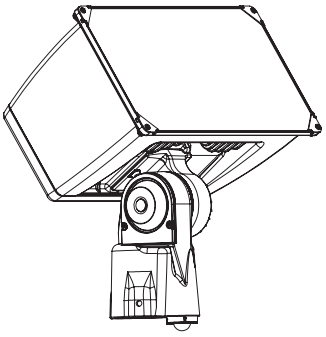

## ACCESSORIES

**Top and Side Visors**

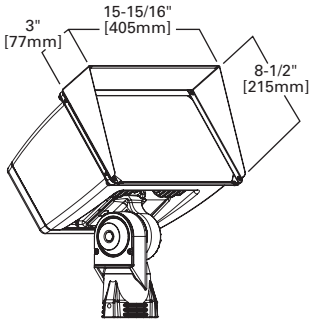


**Wire Guard**

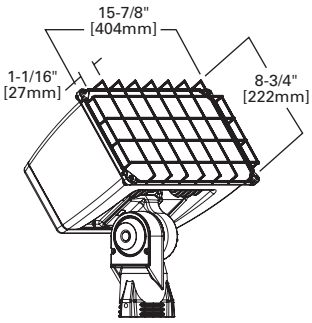


**Vandal Shield**

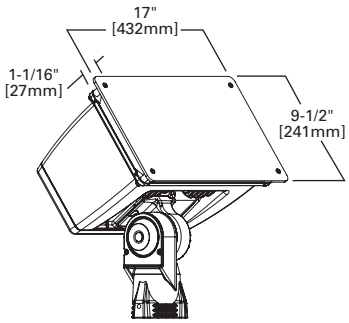


## ORDERING INFORMATION

**Sample Number:** NFFLD-C40-E-UNV-66-S-CB-PER

| Product Family [1] | Light Engine [2] | Driver [3] | Voltage | Distribution | Mounting | Color |
|---|---|---|---|---|---|---|
| **NFFLD**=Night Falcon LED Floodlight | **C25**=10,500 Nominal Lumens<br>**C40**=16,900 Nominal Lumens<br>**C55**=20,000 Nominal Lumens<br>**C70**=24,000 Nominal Lumens | **E**=Non-Dimming<br>**D**=Dimming (0-10V) | **UNV**=120-277V<br>**347**=347V [4]<br>**480**=480V [4] | **66**=NEMA 6H x 6V Wide<br>**33**=NEMA 3H x 3V Wide [5] | **S**=Slipfitter [6]<br>**T**=Trunnion<br>**Y**=Yoke | **CB**=Carbon Bronze (Standard)<br>**BK**=Black<br>**BZ**=Bronze<br>**AP**=Grey<br>**WH**=White<br>**WHT**=Summit White<br>**DP**=Dark Platinum<br>**GM**=Graphite Metallic |

| **Options** (Add as Suffix) | **Accessories** (Order Separately) [11] |
|---|---|
| **7030**=70 CRI / 3000K [7]<br>**7050**=70 CRI / 5000K [7]<br>**7060**=70 CRI / 5700K [7]<br>**PER**=NEMA 3-PIN Twistlock Photocontrol Receptacle<br>**PER7**=NEMA 7-PIN Twistlock Photocontrol Receptacle [8]<br>**10K**=10kV/10kA UL 1449 Surge Protective Device<br>**HA**=50°C High Ambient Temperature<br>**D10**=<10% Dimming [8]<br>**MSP/DIM-L12**=Integrated Sensor for Dimming Operation, 8' - 12' Mounting Height [9, 10]<br>**MSP/DIM-L30**=Integrated Sensor for Dimming Operation, 12' - 30' Mounting Height [9, 10]<br>**MSP-L12**=Integrated Sensor for ON/OFF Operation, 8' - 12' Mounting Height [9, 10]<br>**MSP-L30**=Integrated Sensor for ON/OFF Operation, 12' - 30' Mounting Height [9, 10] | **FA63**=3" O.D. Surface Mount Bracket [12]<br>**OA1223**=10kV/10kA UL 1449 Surge Protective Device Replacement<br>**OA/RA1013**=Photocontrol Shorting Cap<br>**OA/RA1014**=NEMA Photocontrol - 120V<br>**OA/RA1016**=NEMA Photocontrol - Multi-Tap<br>**OA/RA1027**=NEMA Photocontrol - 480V<br>**OA/RA1201**=NEMA Photocontrol - 347V<br>**RAB-XX**=Right Angle Pipe Bracket for Slipfitter<br>**SAB-XX**=Steel Angle Bracket for Trunnion<br>**TYS-XX**=Slipfitter Adapter for 2-3/8", 3" or 3-1/2" O.D. Tenon [13]<br>**TS2/NFFLD-XX**=Top and Side Visors [14]<br>**VS/NFFLD**=Vandal Shield [14]<br>**WG/NFFLD**=Wire Guard [14]<br>**ISHH-01**=Integrated Sensor Programming Remote |

**NOTES:**
**1.** DesignLights Consortium® Qualified. Refer to www.designlights.org Qualified Products List under Family Models for details.
**2.** Standard 4000K CCT and minimum 70 CRI. Consult IES file for actual lumen output.
**3.** Consult factory for driver surge protection values.
**4.** Not recommended for use with ungrounded, delta configured systems.
**5.** Only available in C25 adn C40 light engines.
**6.** Fits 2-3/8" to 3" O.D. tenon, wire leads run through slipfitter.
**7.** Extended lead times apply. Use dedicated IES files for 3000K and 5700K when performing layouts. These files are published on the Night Falcon luminaire product page on the website.
**8.** Must order with dimming driver.
**9.** 0-10V dimming driver required. Integrated sensor option only available in slipfitter mounting.
**10.** Not available with Photocontrol.
**11.** Replace XX with color designation. Additional brackets and adaptors available on the poles product page on the website.
**12.** Not available with tenon mount.
**13.** Not available with slipfitter mount.
**14.** Cannot combine TS2 (Top and Side Visor), VS (Vandal Shield), or WG (Wire Guard), limited to one external guard per fixture.

## STOCK ORDERING INFORMATION

**Stock Sample Number:** NFFLD-C40-S

| Series | Light Engine | Mounting | Voltage |
|---|---|---|---|
| **NFFLD**=Night Falcon | **C25**=10,500 Nominal Lumens<br>**C40**=16,900 Nominal Lumens | **S**=Slipfitter<br>**T**=Trunnion | **[BLANK]**=120-277V<br>**347**=347V |

**NOTES**: Options not available with stock products. Order accessories as separate items for field installation. Refer to standard ordering information to add options. Refer to In-Stock Guide for availability. Stock fixture is 4000K, non-dimming, 120-277V or 347V 6Hx6V, carbon bronze only.

# Lumark

## DESCRIPTION

The Night Falcon™ LED floodlight luminaire combines high-efficiency optics, superior thermal management and energy efficiency in a cost-effective solution. The compact, robust design incorporates a separate driver compartment for maximum heat dissipation to insure longevity of both the fixture and the LEDs. The Night Falcon luminaire uses precision engineered optics delivering superior uniformity and excellent illumination to the targeted application. Typical applications include area lighting for security, building facade lighting, accent and signage lighting in both commercial and industrial applications. The Night Falcon luminaire is UL/cUL listed for wet locations and is IP66 rated.

| | | |
|---|---|---|
| **Catalog #** | | **Type** |
| **Project** | | |
| **Comments** | | **Date** |
| **Prepared by** | | |

## SPECIFICATION FEATURES

### Construction
Heavy-duty, die-cast aluminum housing, driver compartment and driver housing door. A separate driver compartment and external fins provide optimal thermal management that result in longer LED and driver life.The housing, driver compartment and optical chamber are IP66 rated. Access to the driver for maintenance is achieved with a removable driver door using pan head screws. A one-piece silicone gasket seals the door to the fixture housing. The fixture is 3G vibration rated (ANSI C136.31) to ensure durability in area and site lighting applications. Suitable for mounting within 4′ (1.2m) of the ground.

### Optics
The LED chamber incorporates a vacuum metalized reflector that provides high-efficiency illumination. Optics are precisely designed to shape the the NEMA 6H x 6V wide distribution and the 3H x 3V spot distribution, maximizing efficiency and application spacing. Clear glass tempered lens with full circumference form-in-place silicone gasket protects the optics from damage. Offered standard in 4000K (+/- 275K) CCT and minimum 70 CRI. Optional 5700K, 5000K and 3000K CCT and minimum 70 CRI are available.

### Electrical
LED driver is mounted to the removable die-cast aluminum door for optimal heat sinking and ease of maintenance. 120-277V 50/60Hz, 347V 60Hz or 480V 60Hz operation. Integral 6kV surge is standard.10kV/10kA common- and differential- mode surge protection available as an option. 0-10V dimming driver is available to accommodate controls capability such as dimming and occupancy. Standard NEMA 3-PIN twistlock photocontrol receptacle and NEMA 7-PIN twistlock photocontrol receptacles are available as options. Suitable for ambient temperatures from -40°C to 40°C. Optional 50°C HA (high ambient) available. 92% lumen maintenance greater than 60,000 hours per IESNA TM-21 at 25°C.

### Accessories
Heavy-duty steel top and side visors control glare and spill light. 1/8″ thick UV stabilized vandal guard shields glass lens from impact when mounted at low levels. Easy to install wire guard features a heavy-gauge welded construction with corrosion resistant polyester powder coat finish to protect glass from projected objects.

### Mounting
Mounting options include an integral die-cast aluminum slipfitter that is preset to a tilt of 45°. The knuckle base is supplied with a tooth lock adjustment that can be adjusted in 5° increments to provide flexibility in aiming the fixture from a variety of surfaces. Visual 15° adjustment indicators on the knuckle allow for 180° field rotation of the floodlight assembly. The slipfitter fits standard 2-3/8″-3″ O.D. tenon. The trunnion mounting includes a 3/16″ polyester powder coated galvanized steel trunnion with a 16/3 SOW cord. The trunnion mount uses an interlocking slide adjustment that is locked into place with a set screw.

### Finish
Housing and cast parts finished in five-stage super TGIC polyester powder coat paint, 2.5 mil nominal thickness for superior protection against fade and wear. Standard color is carbon bronze. Additional colors available in summit white, white, grey, bronze, black, dark platinum and graphite metallic. Consult your lighting representitive at Eaton for a complete selection of standard colors.

### Warranty
Five-year warranty.

# NFFLD
## NIGHT FALCON

**Solid State LED**

**FLOODLIGHT**

## DIMENSIONS

**Slipfitter Mount**

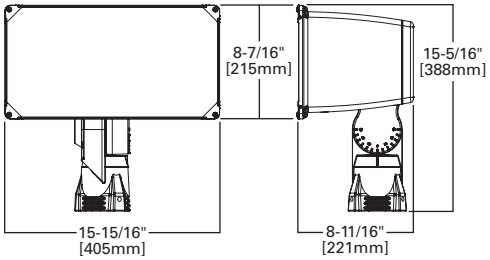


**Trunnion Mount**

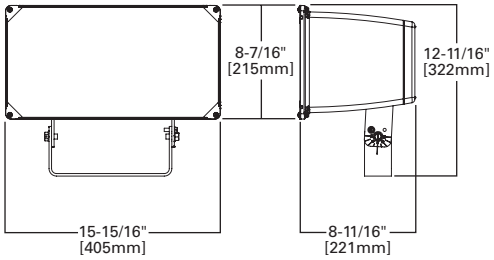


**Yoke Mount**

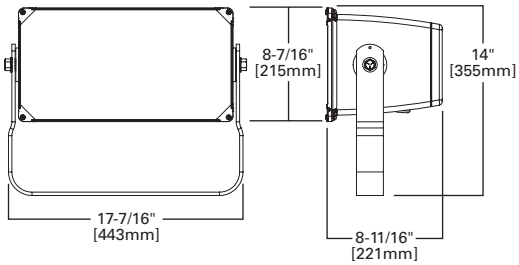


*www.designlights.org

## CERTIFICATION DATA
UL/cUL Wet Location Listed
IP66 Fixture and Optical Chamber
LM79/LM80 Compliant
3G Vibration Rated
RoHS Compliant
DesignLights Consortium® Qualified*

## ENERGY DATA
**Electronic LED Driver**
> 0.9 Power Factor
< 20% Total Harmonic Distortion
120V 50/60Hz, 347V/60Hz and 480V/60Hz
-40°C Minimum Ambient Temperature Rating
+40°C Maximum Ambient Temperature Rating

## EPA
**Effective Projected Area** (Sq. Ft.): 1.25

## SHIPPING DATA
**Approximate Net Weight:**
20 lbs. (9.09 kgs.)

## POWER AND LUMENS

| | 6x6 | | | | 3x3 | | | |
|---|---|---|---|---|---|---|---|---|
| **C25 LED** | **NFFLD-C25** | **NFFLD-C25-7030** | **NFFLD-C25-7050** | **NFFLD-C25-7060** | **NFFLD-C25** | **NFFLD-C25-7030** | **NFFLD-C25-7050** | **NFFLD-C25-7060** |
| Delivered Lumens | 10,530 | 10,122 | 10,383 | 10,217 | 10,272 | 9,874 | 10,128 | 9,967 |
| CCT (Kelvin) | 4000K | 3000K | 5000K | 5700K | 4000K | 3000K | 5000K | 5700K |
| CRI (Color Rendering Index) | 70 | 70 | 70 | 70 | 70 | 70 | 70 | 70 |
| Power Consumption (Watts) | 85W | 85W | 85W | 85W | 93W | 93W | 93W | 93W |
| **C40 LED** | **NFFLD-C40** | **NFFLD-C40-7030** | **NFFLD-C40-7050** | **NFFLD-C40-7060** | **NFFLD-C40** | **NFFLD-C40-7030** | **NFFLD-C40-7050** | **NFFLD-C40-7060** |
| Delivered Lumens | 16,932 | 16,268 | 16,686 | 16,421 | 14,113 | 13,567 | 13,916 | 13,694 |
| CCT (Kelvin) | 4000K | 3000K | 5000K | 5700K | 4000K | 3000K | 5000K | 5700K |
| CRI (Color Rendering Index) | 70 | 70 | 70 | 70 | 70 | 70 | 70 | 70 |
| Power Consumption (Watts) | 128W | 128W | 128W | 128W | 143W | 143W | 143W | 143W |
| **C55 LED** | **NFFLD-C55** | **NFFLD-C55-7030** | **NFFLD-C55-7050** | **NFFLD-C55-7060** | | | | |
| Delivered Lumens | 19,943 | 19,407 | 20,144 | 20,285 | | | | |
| CCT (Kelvin) | 4000K | 3000K | 5000K | 5700K | | | | |
| CRI (Color Rendering Index) | 70 | 70 | 70 | 70 | | | | |
| Power Consumption (Watts) | 145W | 145W | 145W | 145W | | | | |
| **C70 LED** | **NFFLD-C70** | **NFFLD-C70-7030** | **NFFLD-C70-7050** | **NFFLD-C70-7060** | | | | |
| Delivered Lumens | 23,797 | 23,157 | 24,037 | 24,205 | | | | |
| CCT (Kelvin) | 4000K | 3000K | 5000K | 5700K | | | | |
| CRI (Color Rendering Index) | 70 | 70 | 70 | 70 | | | | |
| Power Consumption (Watts) | 184W | 184W | 184W | 184W | | | | |

## CURRENT DRAW

| Voltage (V) | Model Series | | | | | |
|---|---|---|---|---|---|---|
| | 6x6 | | | | 3x3 | |
| | **NFFLD-C25** | **NFFLD-C40** | **NFFLD-C55** | **NFFLD-C70** | **NFFLD-C25** | **NFFLD-C40** |
| | **Current (A)** | **Current (A)** | **Current (A)** | **Current (A)** | **Current (A)** | **Current (A)** |
| 120V | 0.708 | 1.070 | 1.2299 | 1.5695 | 0.778 | 1.190 |
| 277V | 0.340 | 0.465 | 0.535 | 0.6726 | 0.340 | 0.531 |
| 347V | 0.251 | 0.377 | 0.4213 | 0.5334 | 0.271 | 0.419 |
| 480V | 0.195 | 0.273 | 0.3044 | 0.3831 | 0.207 | 0.320 |

## LUMEN MAINTENANCE

| Ambient Temperature | TM-21 Lumen Maintenance (60,000 Hours) | Theoretical L70 (Hours) |
|---|---|---|
| **6H x 6V (Wide)** | | |
| 25°C | > 94.55% | > 388,000 |
| 40°C | > 93.58% | > 327,000 |
| 50°C | -- | -- |
| **3H x 3V (Spot)** | | |
| 25°C | >92.18% | >262,000 |
| 40°C | >91.81% | >249,000 |

## LUMEN MULTIPLIER

| Ambient Temperature | Lumen Multiplier |
|---|---|
| 10°C | 1.03 |
| 15°C | 1.02 |
| 25°C | 1.00 |
| 40°C | 0.97 |
| 50°C | 0.96 |

## DRILLING PATTERNS

**Trunnion Mount**

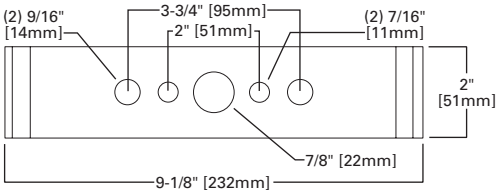


**Yoke Mount**

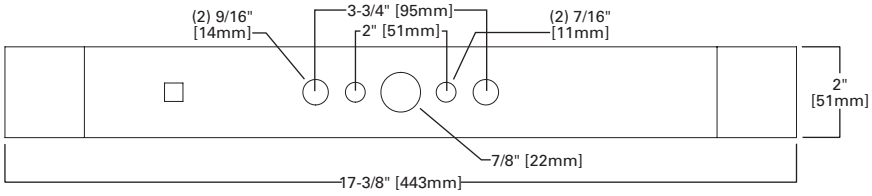


## OPTIONAL INTEGRATED SENSOR

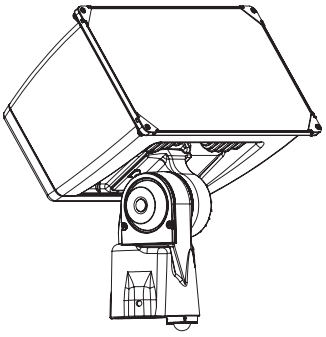

## ACCESSORIES

**Top and Side Visors**

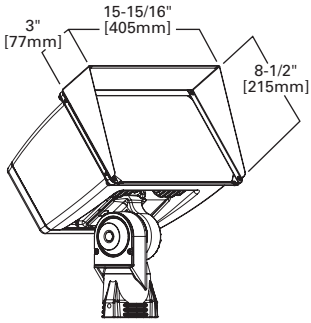


**Wire Guard**

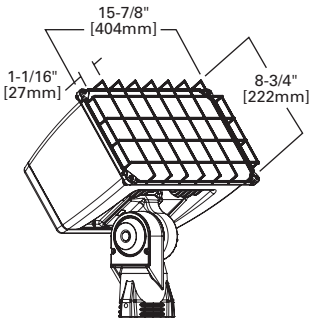


**Vandal Shield**

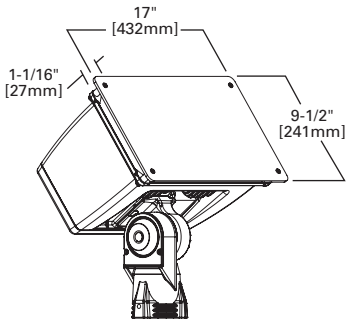


## ORDERING INFORMATION

**Sample Number:** NFFLD-C40-E-UNV-66-S-CB-PER

| Product Family [1] | Light Engine [2] | Driver [3] | Voltage | Distribution | Mounting | Color |
|---|---|---|---|---|---|---|
| **NFFLD**=Night Falcon LED Floodlight | **C25**=10,500 Nominal Lumens<br>**C40**=16,900 Nominal Lumens<br>**C55**=20,000 Nominal Lumens<br>**C70**=24,000 Nominal Lumens | **E**=Non-Dimming<br>**D**=Dimming (0-10V) | **UNV**=120-277V<br>**347**=347V [4]<br>**480**=480V [4] | **66**=NEMA 6H x 6V Wide<br>**33**=NEMA 3H x 3V Wide [5] | **S**=Slipfitter [6]<br>**T**=Trunnion<br>**Y**=Yoke | **CB**=Carbon Bronze (Standard)<br>**BK**=Black<br>**BZ**=Bronze<br>**AP**=Grey<br>**WH**=White<br>**WHT**=Summit White<br>**DP**=Dark Platinum<br>**GM**=Graphite Metallic |

| **Options** (Add as Suffix) | **Accessories** (Order Separately) [11] |
|---|---|
| **7030**=70 CRI / 3000K [7]<br>**7050**=70 CRI / 5000K [7]<br>**7060**=70 CRI / 5700K [7]<br>**PER**=NEMA 3-PIN Twistlock Photocontrol Receptacle<br>**PER7**=NEMA 7-PIN Twistlock Photocontrol Receptacle [8]<br>**10K**=10kV/10kA UL 1449 Surge Protective Device<br>**HA**=50°C High Ambient Temperature<br>**D10**=<10% Dimming [8]<br>**MSP/DIM-L12**=Integrated Sensor for Dimming Operation, 8' - 12' Mounting Height [9, 10]<br>**MSP/DIM-L30**=Integrated Sensor for Dimming Operation, 12' - 30' Mounting Height [9, 10]<br>**MSP-L12**=Integrated Sensor for ON/OFF Operation, 8' - 12' Mounting Height [9, 10]<br>**MSP-L30**=Integrated Sensor for ON/OFF Operation, 12' - 30' Mounting Height [9, 10] | **FA63**=3" O.D. Surface Mount Bracket [12]<br>**OA1223**=10kV/10kA UL 1449 Surge Protective Device Replacement<br>**OA/RA1013**=Photocontrol Shorting Cap<br>**OA/RA1014**=NEMA Photocontrol - 120V<br>**OA/RA1016**=NEMA Photocontrol - Multi-Tap<br>**OA/RA1027**=NEMA Photocontrol - 480V<br>**OA/RA1201**=NEMA Photocontrol - 347V<br>**RAB-XX**=Right Angle Pipe Bracket for Slipfitter<br>**SAB-XX**=Steel Angle Bracket for Trunnion<br>**TYS-XX**=Slipfitter Adapter for 2-3/8", 3" or 3-1/2" O.D. Tenon [13]<br>**TS2/NFFLD-XX**=Top and Side Visors [14]<br>**VS/NFFLD**=Vandal Shield [14]<br>**WG/NFFLD**=Wire Guard [14]<br>**ISHH-01**=Integrated Sensor Programming Remote |

**NOTES:**
**1.** DesignLights Consortium® Qualified. Refer to www.designlights.org Qualified Products List under Family Models for details.
**2.** Standard 4000K CCT and minimum 70 CRI. Consult IES file for actual lumen output.
**3.** Consult factory for driver surge protection values.
**4.** Not recommended for use with ungrounded, delta configured systems.
**5.** Only available in C25 adn C40 light engines.
**6.** Fits 2-3/8" to 3" O.D. tenon, wire leads run through slipfitter.
**7.** Extended lead times apply. Use dedicated IES files for 3000K and 5700K when performing layouts. These files are published on the Night Falcon luminaire product page on the website.
**8.** Must order with dimming driver.
**9.** 0-10V dimming driver required. Integrated sensor option only available in slipfitter mounting.
**10.** Not available with Photocontrol.
**11.** Replace XX with color designation. Additional brackets and adaptors available on the poles product page on the website.
**12.** Not available with tenon mount.
**13.** Not available with slipfitter mount.
**14.** Cannot combine TS2 (Top and Side Visor), VS (Vandal Shield), or WG (Wire Guard), limited to one external guard per fixture.

## STOCK ORDERING INFORMATION

**Stock Sample Number:** NFFLD-C40-S

| Series | Light Engine | Mounting | Voltage |
|---|---|---|---|
| **NFFLD**=Night Falcon | **C25**=10,500 Nominal Lumens<br>**C40**=16,900 Nominal Lumens | **S**=Slipfitter<br>**T**=Trunnion | **[BLANK]**=120-277V<br>**347**=347V |

**NOTES**: Options not available with stock products. Order accessories as separate items for field installation. Refer to standard ordering information to add options. Refer to In-Stock Guide for availability. Stock fixture is 4000K, non-dimming, 120-277V or 347V 6Hx6V, carbon bronze only.