SINCE 1945 KEYSTONE LIGHT MADE EASY | AVIVA | COLOR SELECT

KT-LEDXXRD-XC-9CSF-DIM-G-X

DOWNLIGHT RETROFIT GIMBAL TRIM

DESCRIPTION

Downlight Retrofit Gimbal Trim | Color Select Technology | Quick-Disconnect E26 Base

APPLICATION

Ideal for residential, hospitality, retail, and other retrofit and new construction applications

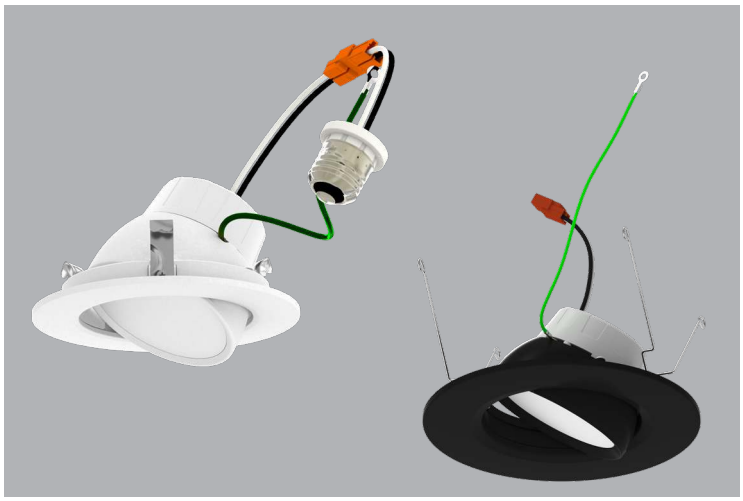

ENERGY STAR | ETL CLASSIFIED Intertek | RoHS Compliant | TITLE 24 JA8 COMPLIANT | TRUSTED NB WARRANTY | 5 YEAR WARRANTY

PRODUCT FEATURES

- Keystone Color Select technology (2700/3000/3500/4000/5000K)
- Includes quick-disconnect E26 base adaptor for easy screw-in installation
- Offers improved aesthetics vs legacy trims
- Ideal for retrofit and remodel applications
- Smooth reflector trim offers clean, modern appearance
- Diffused lens for visual comfort and reduced glare
- Suitable for use in 4" and 6" recessed cans
- Smooth, uniform dimming
- Suitable for use in wet locations
- PF >0.95
- Ambient operating temperature: -4°F/-20°C to 104°F/40°C
- ETL Listed
- CEC Compliant Flicker Rate (CEC JA10 std.)
- Compliant with Part 15 of FCC

PRODUCT IMAGES

KT-LED8RD-4C-9CSF-DIM-G

KT-LED8RD-4C-9CSF-DIM-G-B

KT-LED11RD-6C-9CSF-DIM-G

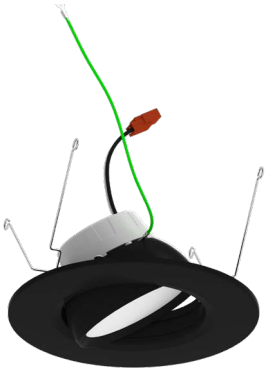

KT-LED11RD-6C-9CSF-DIM-G-B

SINCE 1945 KEYSTONE LIGHT MADE EASY

AVIVA

COLOR SELECT

KT-LEDXXRD-XC-9CSF-DIM-G-X

DOWNLIGHT RETROFIT GIMBAL TRIM

PERFORMANCE SPECIFICATIONS - WHITE TRIM COLOR

Catalog Number	Input Voltage	Wattage	CCT (Selectable)*	Lumen Output	Efficacy	CRI	Power Factor	Beam Angle	Lifetime
KT-LED8RD-4C-9CSF-DIM-G	120V	8W	2700K	720	90 lm/W	> 90	> 0.9	95º	50,000 hrs
			3000K	750	94 lm/W				
			3500K	800	100 lm/W				
			4000K	810	101 lm/W				
			5000K	800	100 lm/W				
KT-LED11RD-6C-9CSF-DIM-G	120V	11W	2700K	1120	102 lm/W	> 90	> 0.9	95º	50,000 hrs
			3000K	1140	104 lm/W				
			3500K	1160	105 lm/W				
			4000K	1160	105 lm/W				
			5000K	1140	104 lm/W				

** Preset to lowest CCT: 2700K*
Color Uniformity: CCT (Correlated Color Temperature) range as per guidelines outlined in ANSI C78.377-2017

PERFORMANCE SPECIFICATIONS - BLACK TRIM COLOR

Catalog Number	Input Voltage	Wattage	CCT (Selectable)*	Lumen Output	Efficacy	CRI	Power Factor	Beam Angle	Lifetime
KT-LED8RD-4C-9CSF-DIM-G-B	120V	8W	2700K	720	90 lm/W	> 90	> 0.9	95º	50,000 hrs
			3000K	730	91 lm/W				
			3500K	750	93 lm/W				
			4000K	750	94 lm/W				
			5000K	770	96 lm/W				
KT-LED11RD-6C-9CSF-DIM-G-B	120V	11W	2700K	1050	95 lm/W	> 90	> 0.9	95º	50,000 hrs
			3000K	1070	97 lm/W				
			3500K	1090	99 lm/W				
			4000K	1090	99 lm/W				
			5000K	1070	97 lm/W				

** Preset to lowest CCT: 2700K*
Color Uniformity: CCT (Correlated Color Temperature) range as per guidelines outlined in ANSI C78.377-2017

SINCE 1945 KEYSTONE LIGHT MADE EASY

AVIVA

COLOR SELECT

KT-LEDXXRD-XC-9CSF-DIM-G-X

DOWNLIGHT RETROFIT GIMBAL TRIM

PHOTOMETRIC SPECIFICATIONS

KT-LED8RD-4C-9CSF-DIM-G

POLAR CANDELA DISTRIBUTION

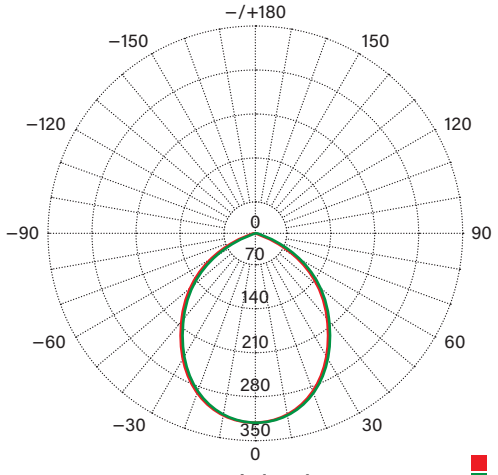

Beam Angle (50%): 91.9°

Unit: cd
C0/C180–91.9; Ic: 326
C90/C270–91.9; Ic: 325

LUX DISTANCE CURVE

Flux Out: 456.0 lm

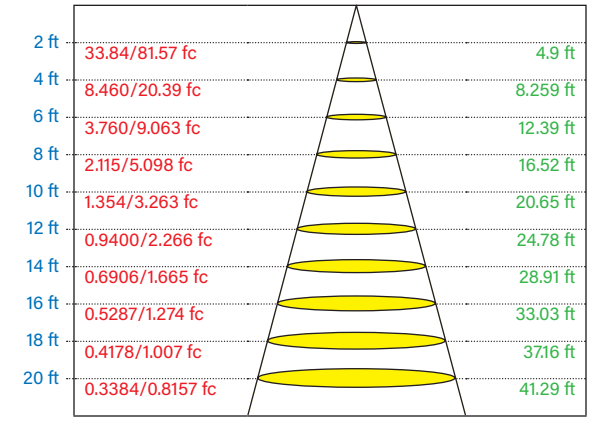

Curves show illuminated area and average illumination when lamp is at various distances.

KT-LED11RD-6C-9CSF-DIM-G

POLAR CANDELA DISTRIBUTION

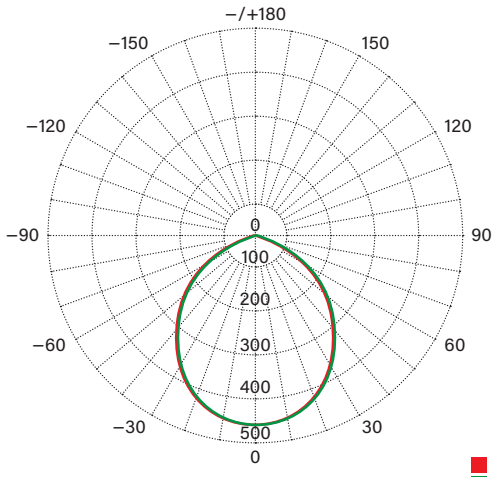

Beam Angle (50%): 98.7°

Unit: cd
C0/C180–98.7; Ic: 461
C90/C270–98.7; Ic: 461

LUX DISTANCE CURVE

Flux Out: 757.2 lm

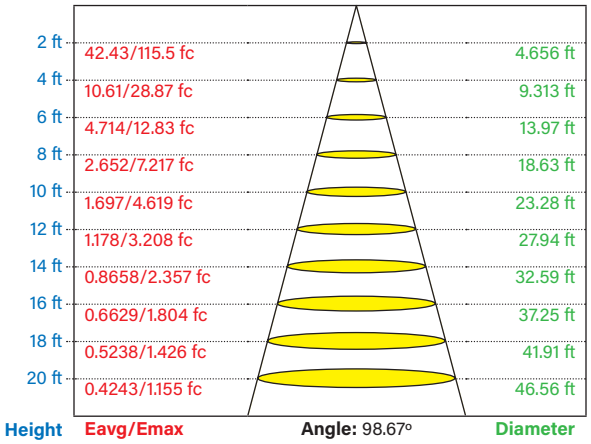

Curves show illuminated area and average illumination when lamp is at various distances.

(*Photometric Specifications* continued on next page)

KT-LEDXXRD-XC-9CSF-DIM-G-X

DOWNLIGHT RETROFIT GIMBAL TRIM

PHOTOMETRIC SPECIFICATIONS (CONTINUED)

KT-LED8RD-4C-9CSF-DIM-G-B

POLAR CANDELA DISTRIBUTION

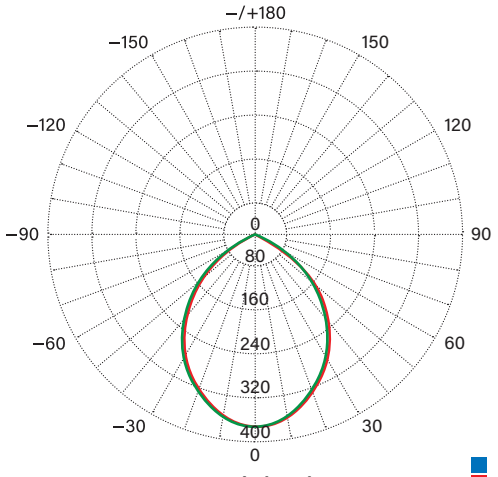

Beam Angle (50%): 87.1°

Unit: cd
C0/C180–87.3; Ic: 326
C90/C270–87.0; Ic: 325

LUX DISTANCE CURVE

Flux Out: 477.2 lm

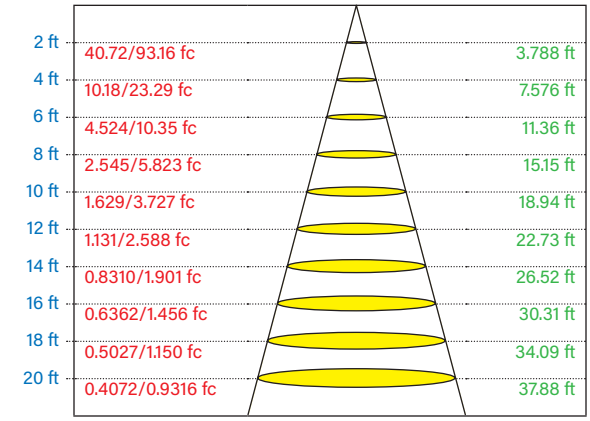

Height **Eavg/Emax** **Angle:** 86.88° **Diameter**

Curves show illuminated area and average illumination when lamp is at various distances.

KT-LED11RD-6C-9CSF-DIM-G-B

POLAR CANDELA DISTRIBUTION

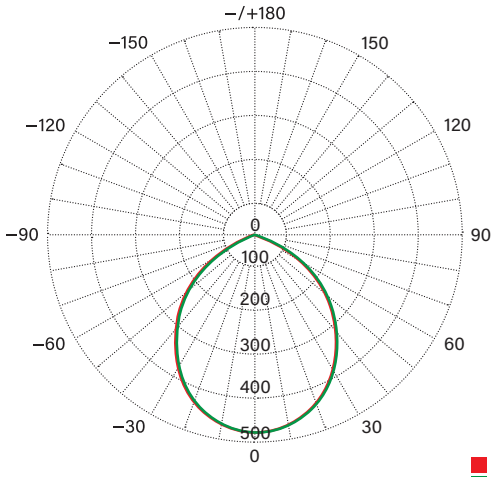

Beam Angle (50%): 94.8°

Unit: cd
C0/C180–94.9; Ic: 461
C90/C270–94.7; Ic: 461

LUX DISTANCE CURVE

Flux Out: 739.9 lm

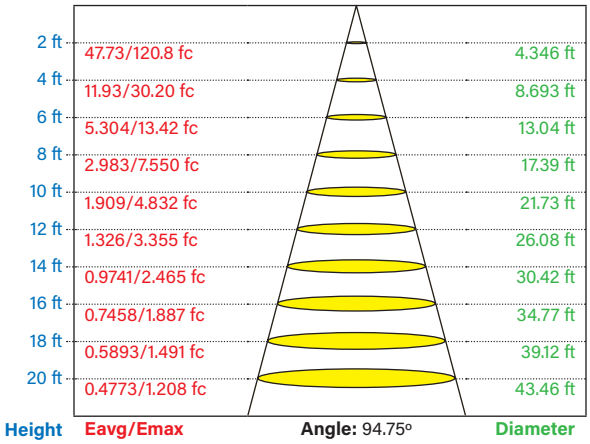

Height **Eavg/Emax** **Angle:** 94.75° **Diameter**

Curves show illuminated area and average illumination when lamp is at various distances.

SINCE 1945 KEYSTONE LIGHT MADE EASY

AVIVA

COLOR SELECT

KT-LEDXXRD-XC-9CSF-DIM-G-X

DOWNLIGHT RETROFIT GIMBAL TRIM

PHYSICAL SPECIFICATIONS

KT-LED8RD-4C-9CSF-DIM-G-X

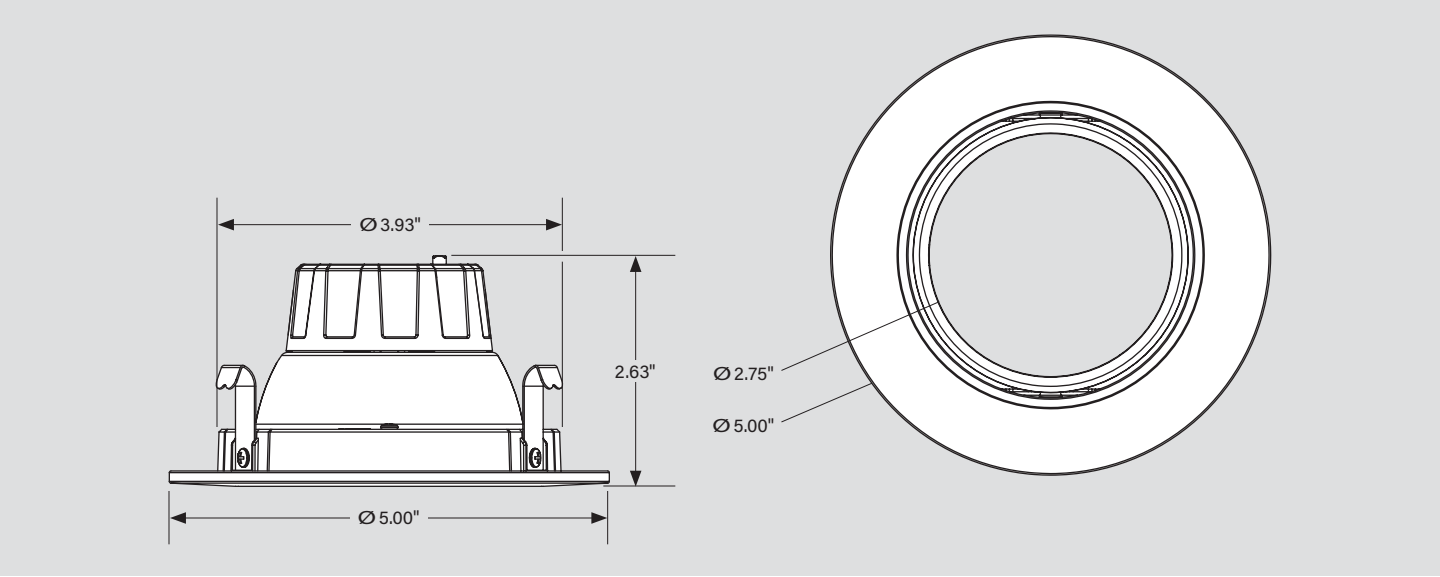

KT-LED11RD-6C-9CSF-DIM-G-X

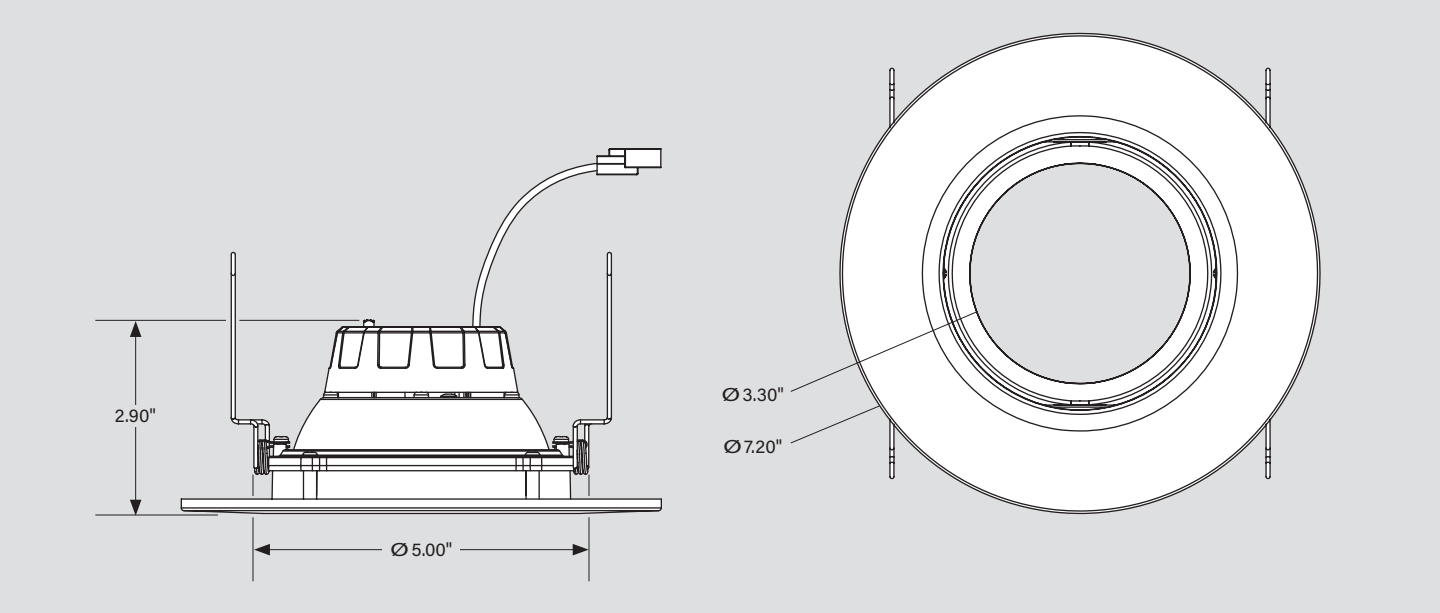

KT-LEDXXRD-XC-9CSF-DIM-G-X

DOWNLIGHT RETROFIT GIMBAL TRIM

COLOR SELECT (CCT) ADJUSTMENT

This fixture is equipped with field-adjustable Keystone Color Select technology.

1. Ensure power is off to the fixture.
2. Adjust dip switch to desired setting.

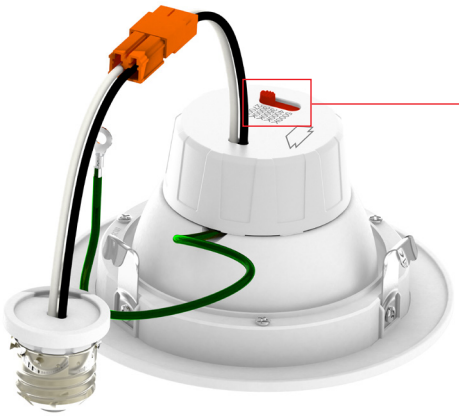

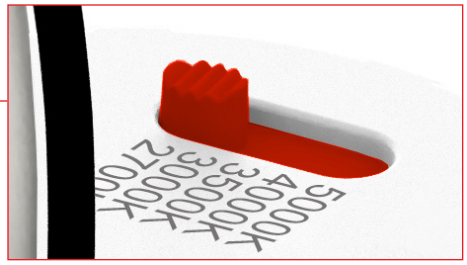

COLOR SELECT ADJUSTMENT SWITCH

Set dip switch to adjust CCT between 2700K, 3000K, 3500K, 4000K, and 5000K. Fixture comes preset at 2700K.

INSTALLATION INSTRUCTIONS

KT-LED8RD-4C-9CSF-DIM-G-X

The existing luminaire housing must be equal to or larger than over-all inner dimensions illustrated below.

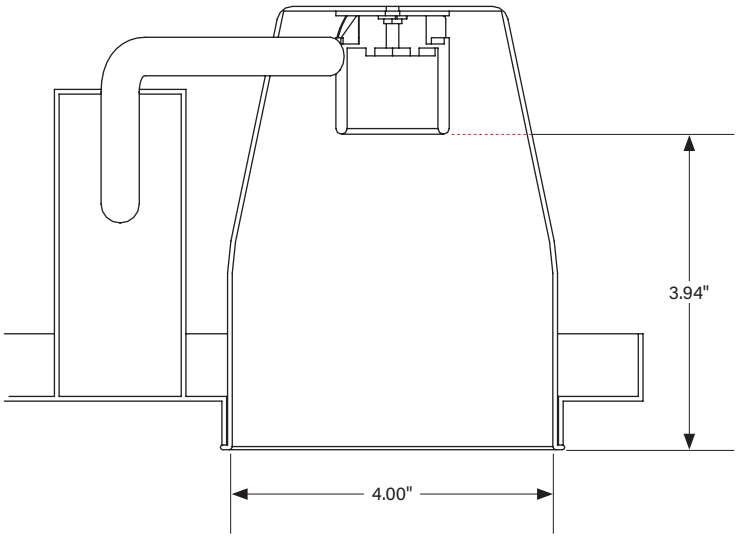

(*Installation Instructions* continued on next page)

SINCE 1945 KEYSTONE LIGHT MADE EASY

AVIVA

COLOR SELECT

KT-LEDXXRD-XC-9CSF-DIM-G-X

DOWNLIGHT RETROFIT GIMBAL TRIM

INSTALLATION INSTRUCTIONS (CONTINUED)

1. **Shut off power at the source of the recessed housing into which you are installing fixture.** Remove existing trim and CFL or incandescent bulb.

   Note: Follow all federal and local regulations when disposing of lamps and removed components.

2. Screw the E26 adaptor into the socket inside the housing.

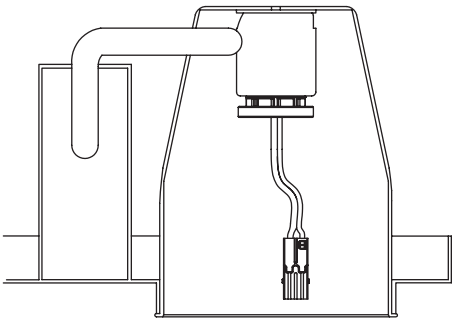

3. Select desired CCT using adjustment switch on driver box (see *Color Select (CCT) Adjustment* on page 3).

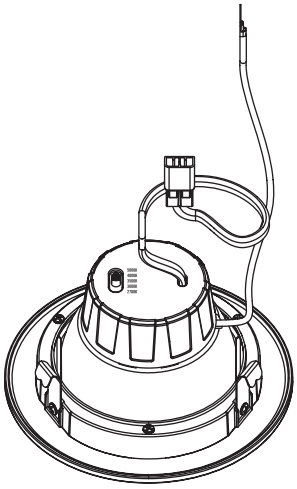

4. Plug E26 base cable connection into the recessed housing kit, ensuring that kit is grounded.

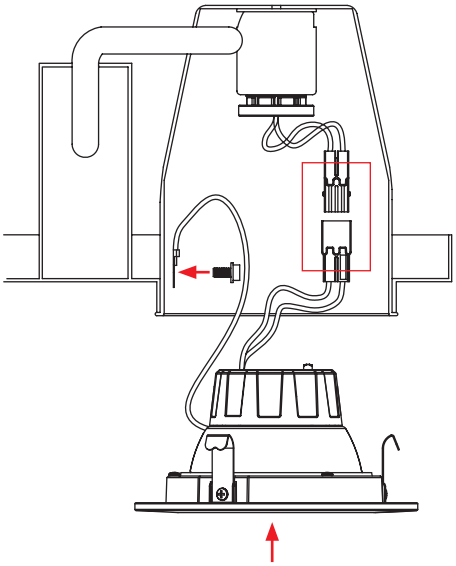

5. Carefully route wires into fixture, sliding the trim and friction clips into the housing for a tight fit.

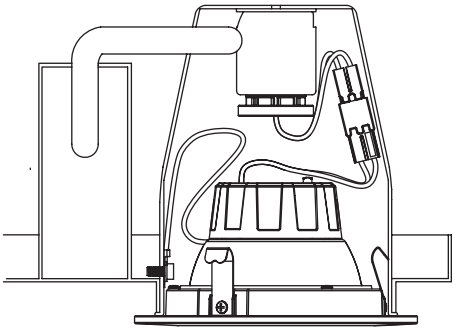

6. Push recessed kit up until trim is flush with ceiling.

   Restore power to the fixture.

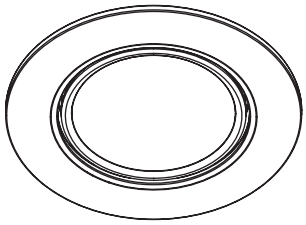

(*Installation Instructions* continued on next page)

KT-LEDXXRD-XC-9CSF-DIM-G-X

DOWNLIGHT RETROFIT GIMBAL TRIM

INSTALLATION INSTRUCTIONS (CONTINUED)

7. Push the edge of the bezel to tilt lens vertically and rotate lens assembly horizontally towards the surface to be illuminated.

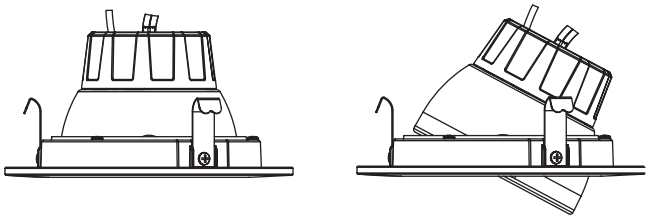

GIMBAL FEATURES

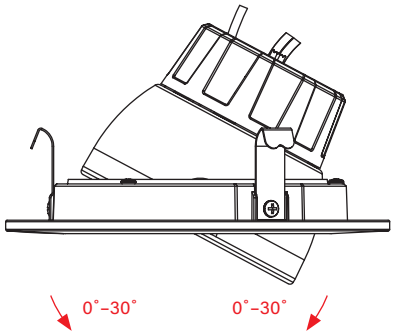

Up to 30º vertical tilt

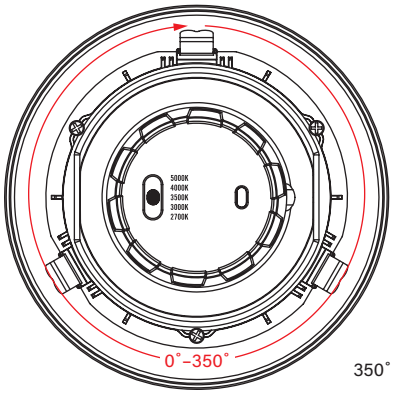

350˚ horizontal rotation

KT-LED11RD-6C-9CSF-DIM-G-X

The existing luminaire housing must be equal to or larger than over-all inner dimensions illustrated below.

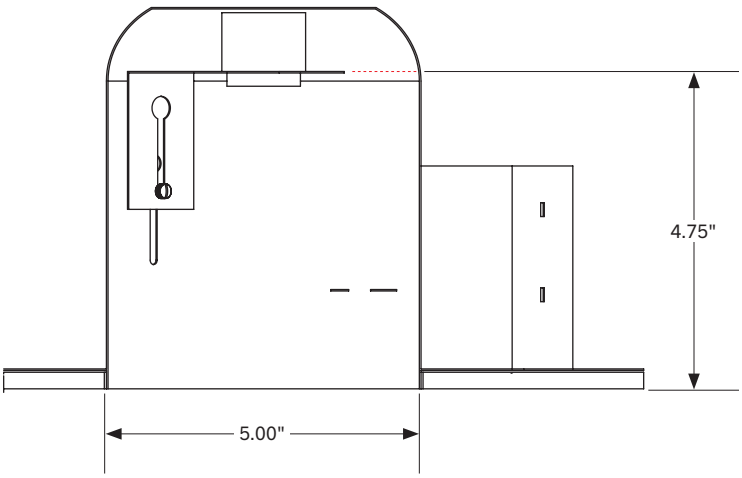

(*Installation Instructions* continued on next page)

SINCE 1945 KEYSTONE LIGHT MADE EASY

AVIVA

COLOR SELECT

KT-LEDXXRD-XC-9CSF-DIM-G-X

DOWNLIGHT RETROFIT GIMBAL TRIM

INSTALLATION INSTRUCTIONS (CONTINUED)

1. **Shut off power at the source of the recessed housing into which you are installing fixture.** Remove existing trim and CFL or incandescent bulb.

   Note: Follow all federal and local regulations when disposing of lamps and removed components.

2. Unscrew the screws on socket bracket; push bracket upward to the top.

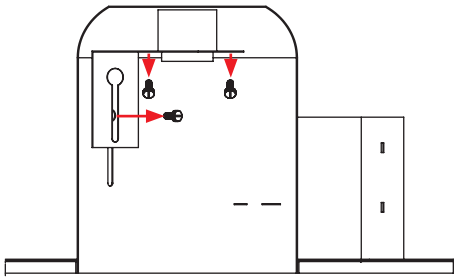

3. Remove existing socket mounting plate from the housing, then remove lamp socket from the plate.

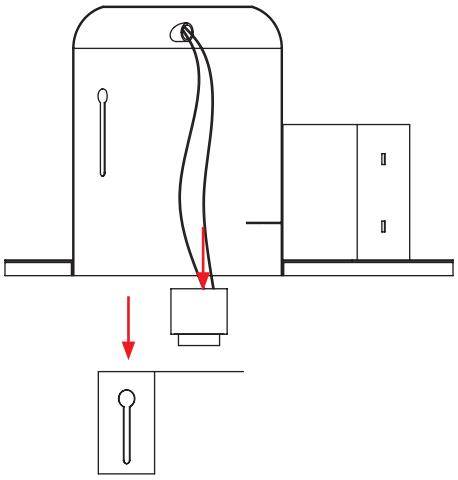

4. Screw E26 adaptor into the socket.

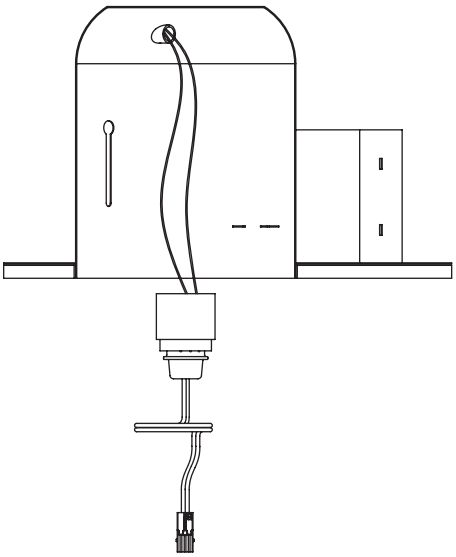

5. Select desired CCT using adjustment switch on driver box (see *Color Select (CCT) Adjustment* on page 3).

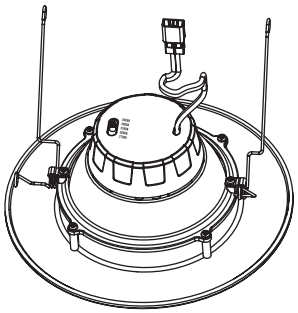

6. Plug E26 base cable connection into the recessed housing, ensuring that kit is grounded .

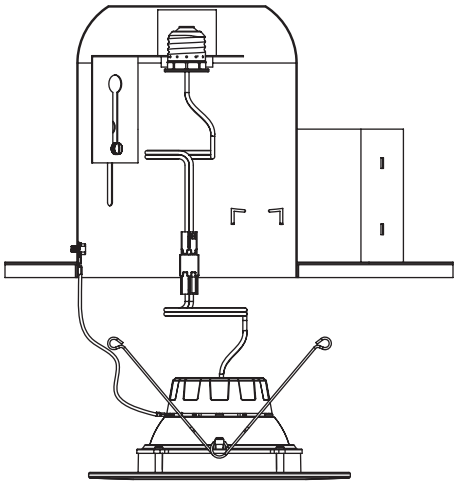

(*Installation Instructions* continued on next page)

SINCE 1945 KEYSTONE LIGHT MADE EASY

AVIVA

COLOR SELECT

KT-LEDXXRD-XC-9CSF-DIM-G-X

DOWNLIGHT RETROFIT GIMBAL TRIM

INSTALLATION INSTRUCTIONS (CONTINUED)

7. Squeeze torsion springs together as shown and install into torsion spring brackets inside recessed housing. For proper installation, the torsion springs should be seated within the brackets and on both sides of the housing.

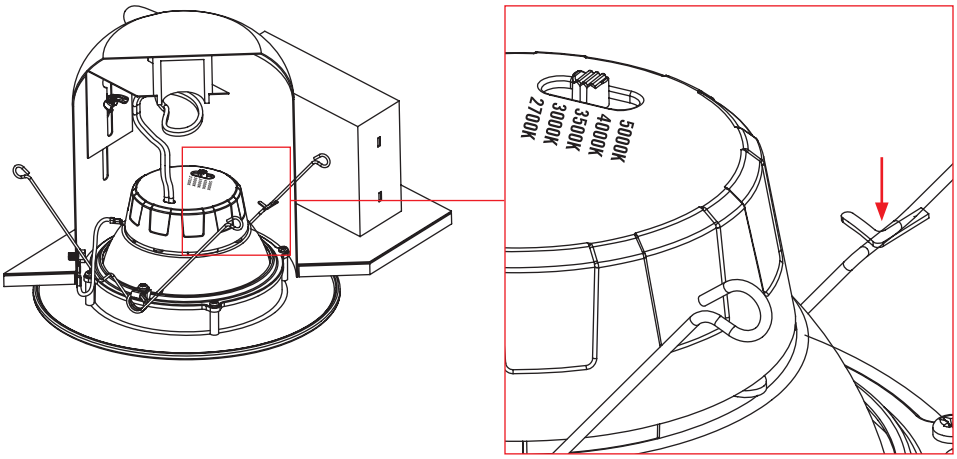

8. Carefully route wires into fixture and push recessed kit up flush to ceiling surface.

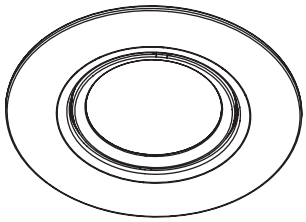

9. Push the edge of the bezel to tilt lens vertically and rotate lens assembly horizontally towards the surface to be illuminated.

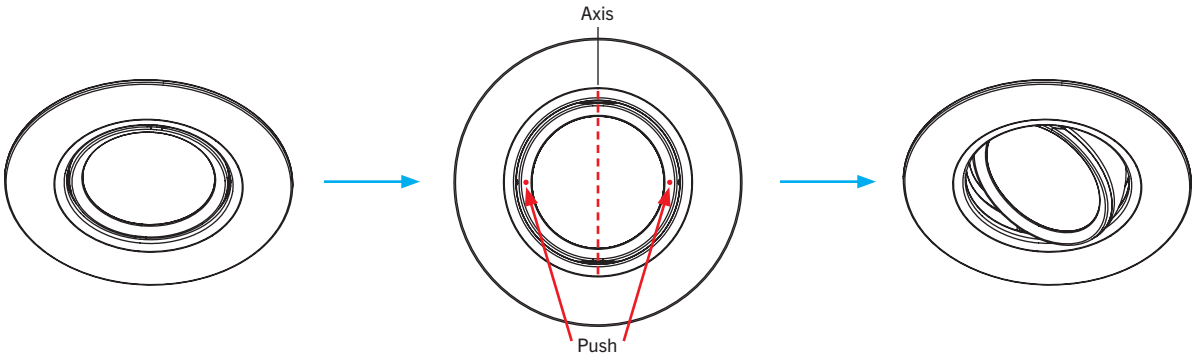

GIMBAL FEATURES

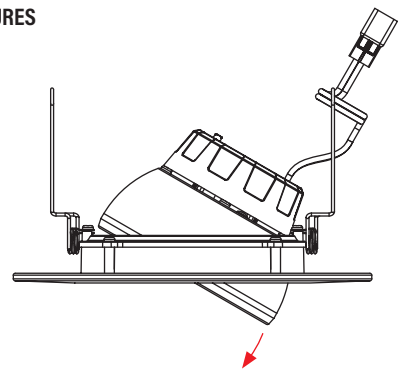

Up to 30º vertical tilt

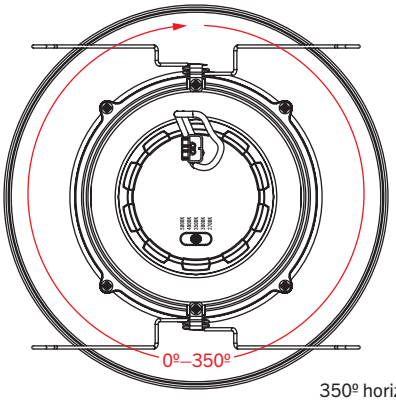

350º horizontal rotation

SINCE 1945 KEYSTONE LIGHT MADE EASY

AVIVA

COLOR SELECT

KT-LEDXXRD-XC-9CSF-DIM-G-X

DOWNLIGHT RETROFIT GIMBAL TRIM

OPTIONAL ACCESSORIES (SOLD SEPARATELY)

GU24 ADAPTOR

Catalog Number	Description	UPC	Easy Code
KT-ADPT-RD-GU24	GU24 Adaptor for downlight retrofit trim	843654137568	WTQ-04

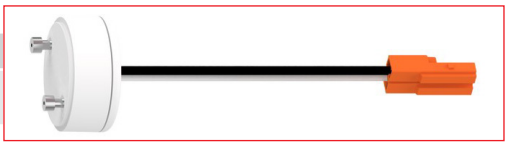

TORSION-SPRING ADAPTOR

Catalog Number	Description	UPC	Easy Code
KT-ADPT-RD-6C-TS	Torsion-spring adaptor for 5" / 6" downlight retrofit gimbal trim	843654137667	GGR-44

ORDERING INFORMATION

Catalog Number	UPC	Easy Code	Energy Star ID
KT-LED8RD-4C-9CSF-DIM-G	843654137476	FKR-02	3555649
KT-LED8RD-4C-9CSF-DIM-G-B	843654166766	RKQ-88	3942826
KT-LED11RD-6C-9CSF-DIM-G	843654137483	PLO-50	3549957
KT-LED11RD-6C-9CSF-DIM-G-B	843654166773	COZ-86	3942827

CATALOG NUMBER BREAKDOWN

KT-	LED	XX	RD-	X	C-	9	CSF-	DIM-	G-	X
1	2	3	4	5	6	7	8	9	10	11	12

1 Keystone Technologies
2 LED Technology
3 Wattage
4 Fixture Type
5 Nominal Size
6 Shape
7 CRI
8 Color Select
9 Color Select Designation
10 TRIAC Dimming
11 Gimbal Construction
12 Housing Color

4 Fixture Type

RD	Recessed Downlight

5 Nominal Size

4	4" Nominal
6	6" Nominal

6 Shape

C	Circular

7 CRI

9	90

9 Color Select Designation

F	2700/3000/3500/4000/5000K

12 Housing Color

	White
B	Black

SINCE 1945 KEYSTONE LIGHT MADE EASY | AVIVA | COLOR SELECT

KT-LEDXXRD-XC-9CSF-DIM-G-X

DOWNLIGHT RETROFIT GIMBAL TRIM

DESCRIPTION

Downlight Retrofit Gimbal Trim | Color Select Technology | Quick-Disconnect E26 Base

APPLICATION

Ideal for residential, hospitality, retail, and other retrofit and new construction applications

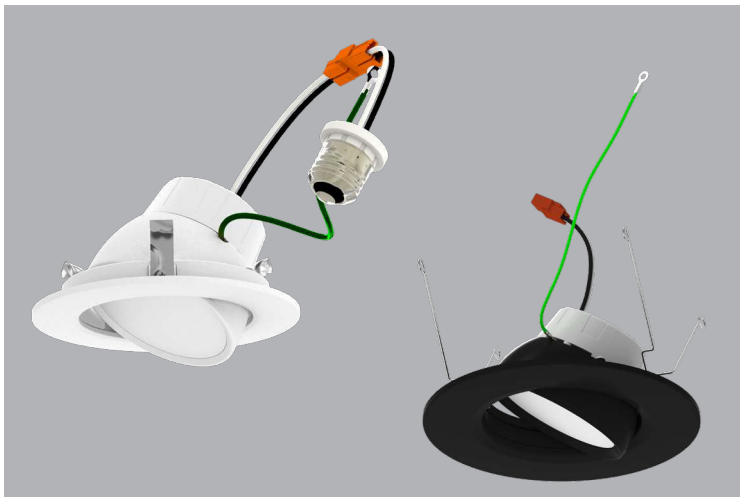

ENERGY STAR | ETL CLASSIFIED Intertek | RoHS Compliant | TITLE 24 JA8 COMPLIANT | TRUSTED NB WARRANTY | 5 YEAR WARRANTY

PRODUCT FEATURES

- Keystone Color Select technology (2700/3000/3500/4000/5000K)
- Includes quick-disconnect E26 base adaptor for easy screw-in installation
- Offers improved aesthetics vs legacy trims
- Ideal for retrofit and remodel applications
- Smooth reflector trim offers clean, modern appearance
- Diffused lens for visual comfort and reduced glare
- Suitable for use in 4" and 6" recessed cans
- Smooth, uniform dimming
- Suitable for use in wet locations
- PF >0.95
- Ambient operating temperature: -4°F/-20°C to 104°F/40°C
- ETL Listed
- CEC Compliant Flicker Rate (CEC JA10 std.)
- Compliant with Part 15 of FCC

PRODUCT IMAGES

KT-LED8RD-4C-9CSF-DIM-G

KT-LED8RD-4C-9CSF-DIM-G-B

KT-LED11RD-6C-9CSF-DIM-G

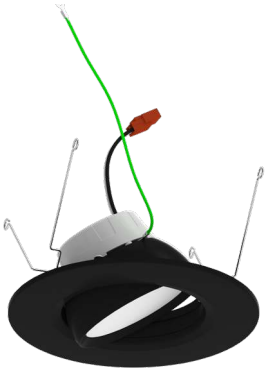

KT-LED11RD-6C-9CSF-DIM-G-B

SINCE 1945 KEYSTONE LIGHT MADE EASY

AVIVA

COLOR SELECT

KT-LEDXXRD-XC-9CSF-DIM-G-X

DOWNLIGHT RETROFIT GIMBAL TRIM

PERFORMANCE SPECIFICATIONS - WHITE TRIM COLOR

Catalog Number	Input Voltage	Wattage	CCT (Selectable)*	Lumen Output	Efficacy	CRI	Power Factor	Beam Angle	Lifetime
KT-LED8RD-4C-9CSF-DIM-G	120V	8W	2700K	720	90 lm/W	> 90	> 0.9	95º	50,000 hrs
			3000K	750	94 lm/W				
			3500K	800	100 lm/W				
			4000K	810	101 lm/W				
			5000K	800	100 lm/W				
KT-LED11RD-6C-9CSF-DIM-G	120V	11W	2700K	1120	102 lm/W	> 90	> 0.9	95º	50,000 hrs
			3000K	1140	104 lm/W				
			3500K	1160	105 lm/W				
			4000K	1160	105 lm/W				
			5000K	1140	104 lm/W				

** Preset to lowest CCT: 2700K*
Color Uniformity: CCT (Correlated Color Temperature) range as per guidelines outlined in ANSI C78.377-2017

PERFORMANCE SPECIFICATIONS - BLACK TRIM COLOR

Catalog Number	Input Voltage	Wattage	CCT (Selectable)*	Lumen Output	Efficacy	CRI	Power Factor	Beam Angle	Lifetime
KT-LED8RD-4C-9CSF-DIM-G-B	120V	8W	2700K	720	90 lm/W	> 90	> 0.9	95º	50,000 hrs
			3000K	730	91 lm/W				
			3500K	750	93 lm/W				
			4000K	750	94 lm/W				
			5000K	770	96 lm/W				
KT-LED11RD-6C-9CSF-DIM-G-B	120V	11W	2700K	1050	95 lm/W	> 90	> 0.9	95º	50,000 hrs
			3000K	1070	97 lm/W				
			3500K	1090	99 lm/W				
			4000K	1090	99 lm/W				
			5000K	1070	97 lm/W				

** Preset to lowest CCT: 2700K*
Color Uniformity: CCT (Correlated Color Temperature) range as per guidelines outlined in ANSI C78.377-2017

SINCE 1945 KEYSTONE LIGHT MADE EASY

AVIVA

COLOR SELECT

KT-LEDXXRD-XC-9CSF-DIM-G-X

DOWNLIGHT RETROFIT GIMBAL TRIM

PHOTOMETRIC SPECIFICATIONS

KT-LED8RD-4C-9CSF-DIM-G

POLAR CANDELA DISTRIBUTION

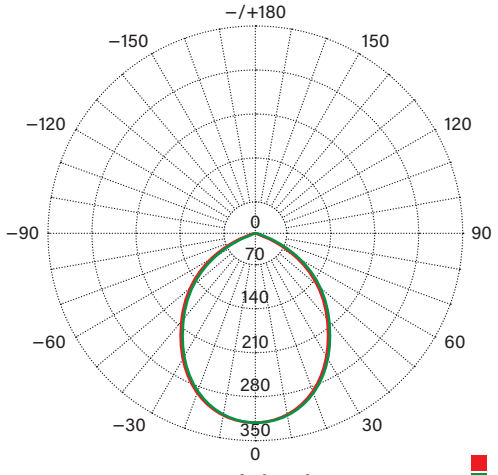

Beam Angle (50%): 91.9°

Unit: cd
C0/C180–91.9; Ic: 326
C90/C270–91.9; Ic: 325

LUX DISTANCE CURVE

Flux Out: 456.0 lm

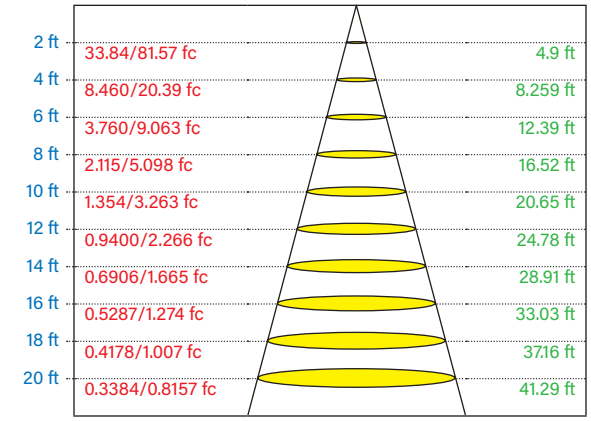

Curves show illuminated area and average illumination when lamp is at various distances.

KT-LED11RD-6C-9CSF-DIM-G

POLAR CANDELA DISTRIBUTION

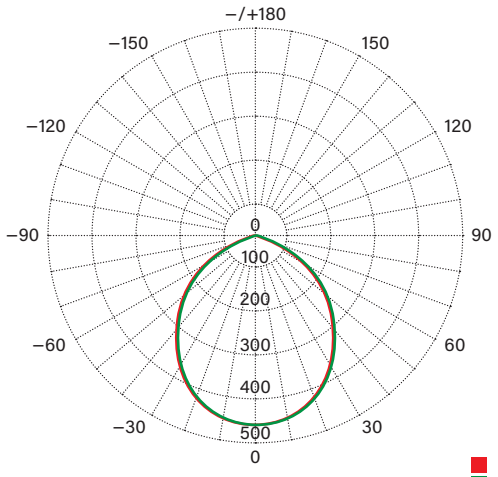

Beam Angle (50%): 98.7°

Unit: cd
C0/C180–98.7; Ic: 461
C90/C270–98.7; Ic: 461

LUX DISTANCE CURVE

Flux Out: 757.2 lm

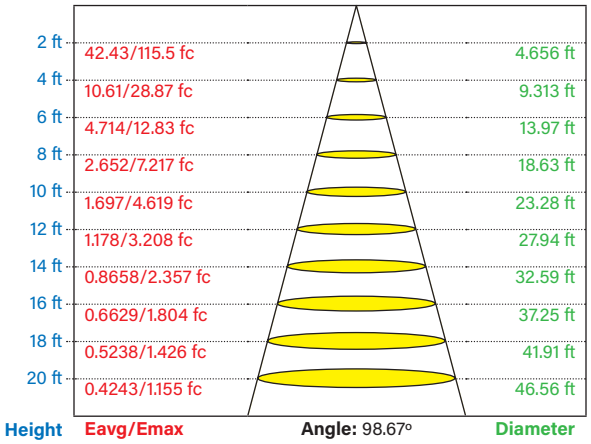

Curves show illuminated area and average illumination when lamp is at various distances.

(*Photometric Specifications* continued on next page)

KT-LEDXXRD-XC-9CSF-DIM-G-X

DOWNLIGHT RETROFIT GIMBAL TRIM

PHOTOMETRIC SPECIFICATIONS (CONTINUED)

KT-LED8RD-4C-9CSF-DIM-G-B

POLAR CANDELA DISTRIBUTION

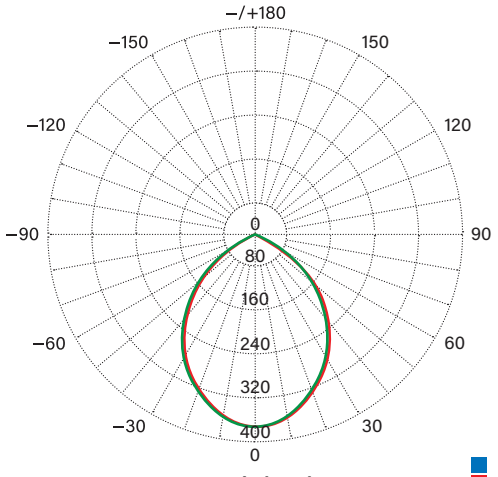

Beam Angle (50%): 87.1°

Unit: cd
C0/C180–87.3; Ic: 326
C90/C270–87.0; Ic: 325

LUX DISTANCE CURVE

Flux Out: 477.2 lm

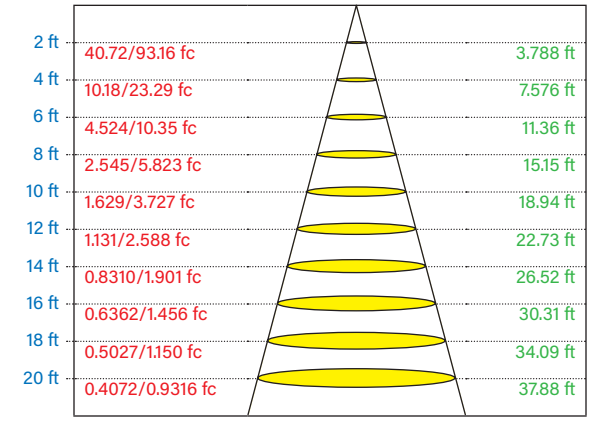

Height **Eavg/Emax** **Angle:** 86.88° **Diameter**

Curves show illuminated area and average illumination when lamp is at various distances.

KT-LED11RD-6C-9CSF-DIM-G-B

POLAR CANDELA DISTRIBUTION

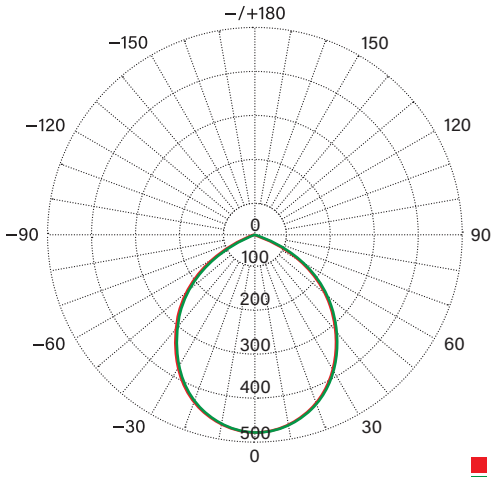

Beam Angle (50%): 94.8°

Unit: cd
C0/C180–94.9; Ic: 461
C90/C270–94.7; Ic: 461

LUX DISTANCE CURVE

Flux Out: 739.9 lm

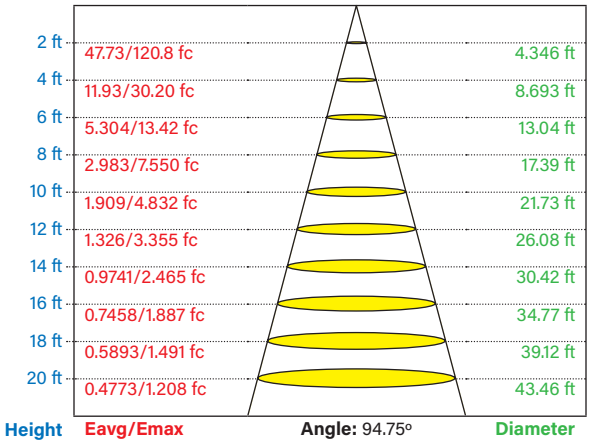

Height **Eavg/Emax** **Angle:** 94.75° **Diameter**

Curves show illuminated area and average illumination when lamp is at various distances.

SINCE 1945 KEYSTONE LIGHT MADE EASY

AVIVA

COLOR SELECT

KT-LEDXXRD-XC-9CSF-DIM-G-X

DOWNLIGHT RETROFIT GIMBAL TRIM

PHYSICAL SPECIFICATIONS

KT-LED8RD-4C-9CSF-DIM-G-X

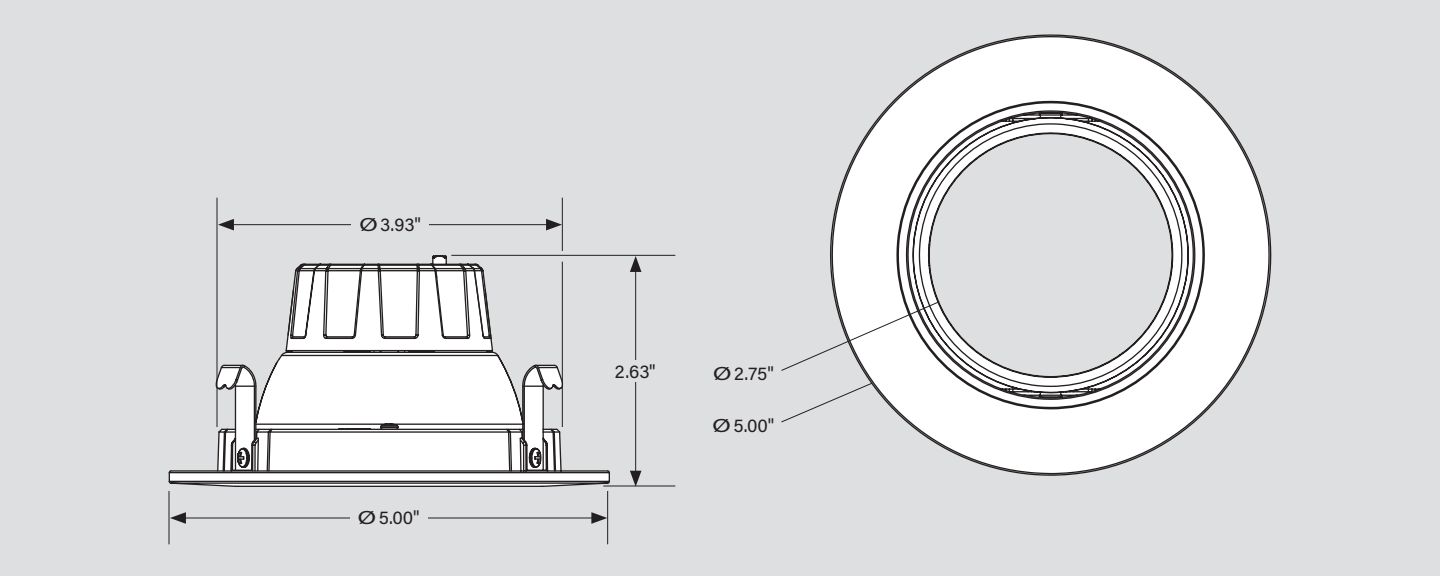

KT-LED11RD-6C-9CSF-DIM-G-X

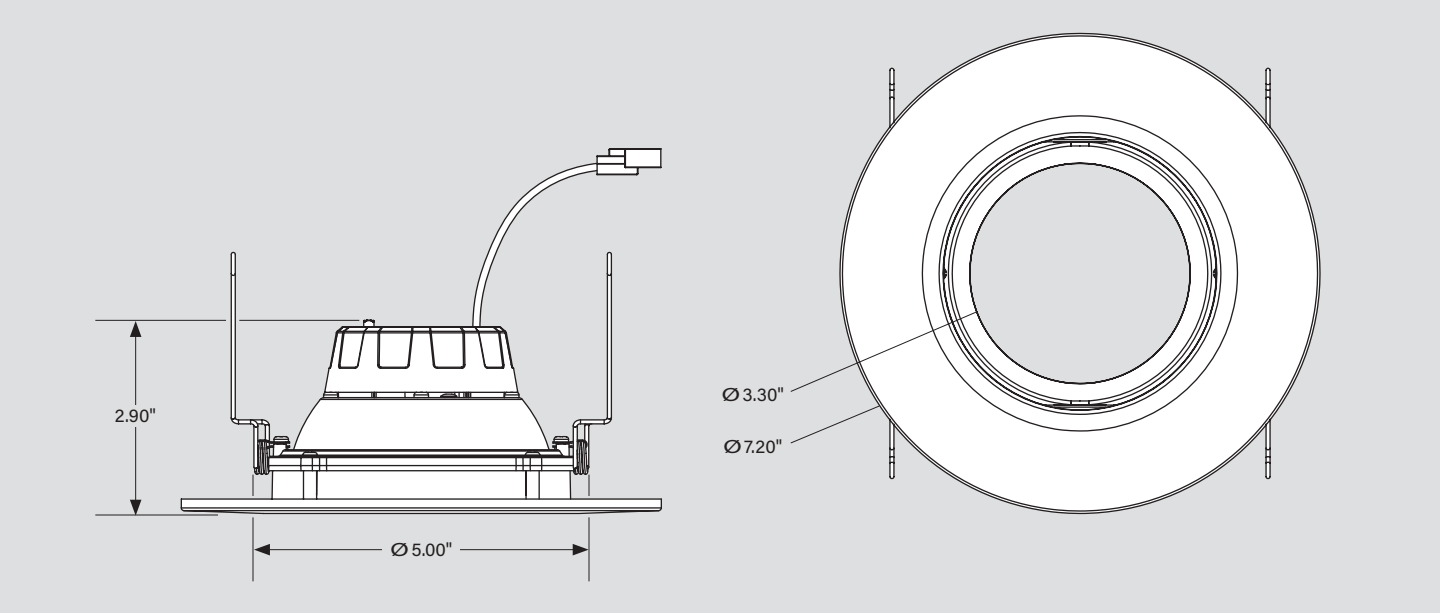

KT-LEDXXRD-XC-9CSF-DIM-G-X

DOWNLIGHT RETROFIT GIMBAL TRIM

COLOR SELECT (CCT) ADJUSTMENT

This fixture is equipped with field-adjustable Keystone Color Select technology.

1. Ensure power is off to the fixture.
2. Adjust dip switch to desired setting.

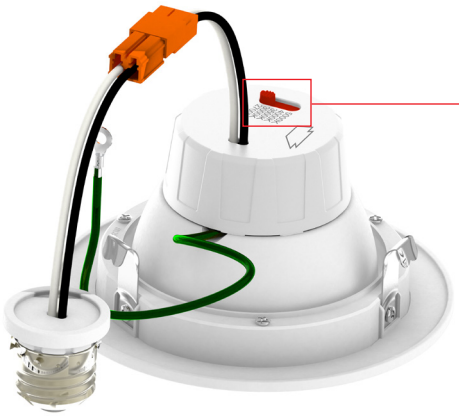

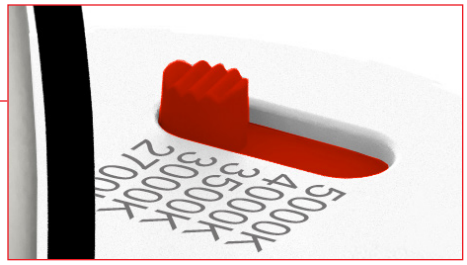

COLOR SELECT ADJUSTMENT SWITCH

Set dip switch to adjust CCT between 2700K, 3000K, 3500K, 4000K, and 5000K. Fixture comes preset at 2700K.

INSTALLATION INSTRUCTIONS

KT-LED8RD-4C-9CSF-DIM-G-X

The existing luminaire housing must be equal to or larger than over-all inner dimensions illustrated below.

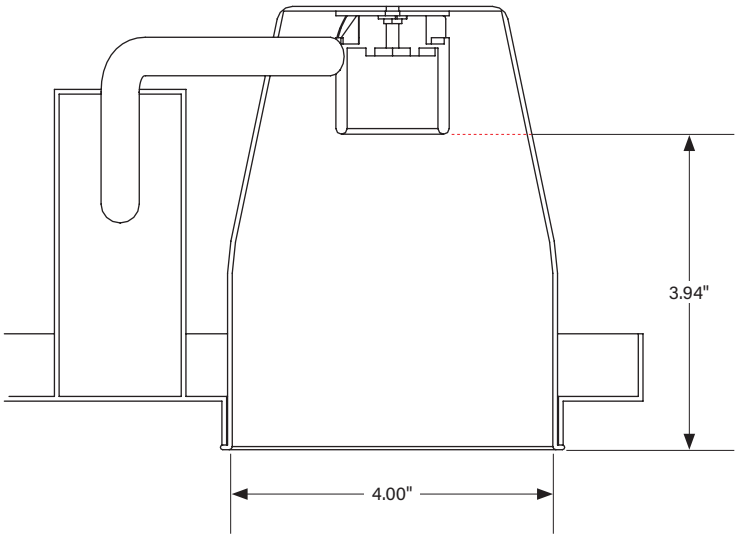

(*Installation Instructions* continued on next page)

SINCE 1945 KEYSTONE LIGHT MADE EASY

AVIVA

COLOR SELECT

KT-LEDXXRD-XC-9CSF-DIM-G-X

DOWNLIGHT RETROFIT GIMBAL TRIM

INSTALLATION INSTRUCTIONS (CONTINUED)

1. **Shut off power at the source of the recessed housing into which you are installing fixture.** Remove existing trim and CFL or incandescent bulb.

   Note: Follow all federal and local regulations when disposing of lamps and removed components.

2. Screw the E26 adaptor into the socket inside the housing.

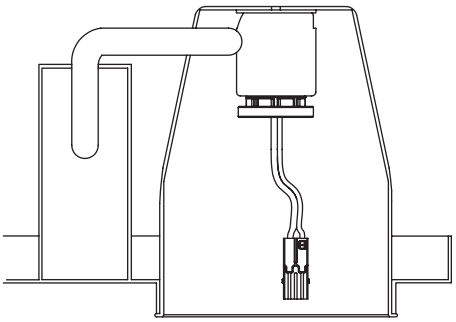

3. Select desired CCT using adjustment switch on driver box (see *Color Select (CCT) Adjustment* on page 3).

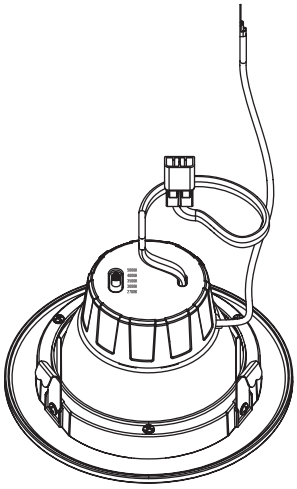

4. Plug E26 base cable connection into the recessed housing kit, ensuring that kit is grounded.

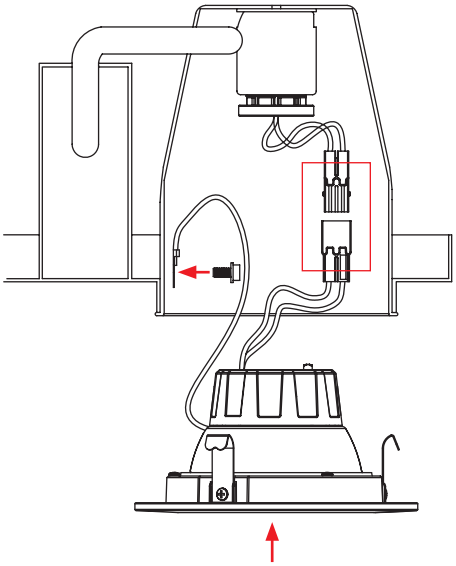

5. Carefully route wires into fixture, sliding the trim and friction clips into the housing for a tight fit.

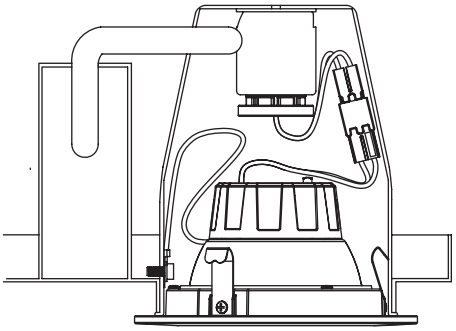

6. Push recessed kit up until trim is flush with ceiling.

   Restore power to the fixture.

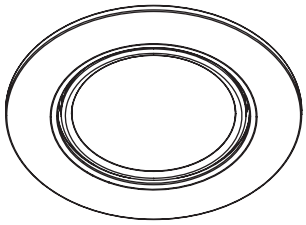

(*Installation Instructions* continued on next page)

KT-LEDXXRD-XC-9CSF-DIM-G-X

DOWNLIGHT RETROFIT GIMBAL TRIM

INSTALLATION INSTRUCTIONS (CONTINUED)

7. Push the edge of the bezel to tilt lens vertically and rotate lens assembly horizontally towards the surface to be illuminated.

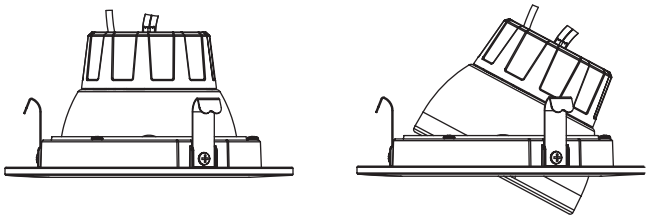

GIMBAL FEATURES

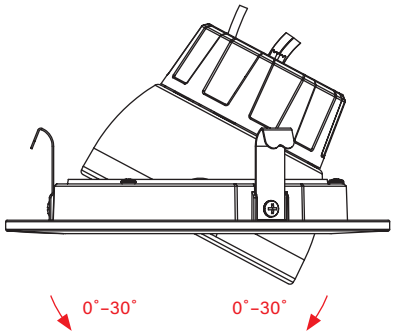

Up to 30º vertical tilt

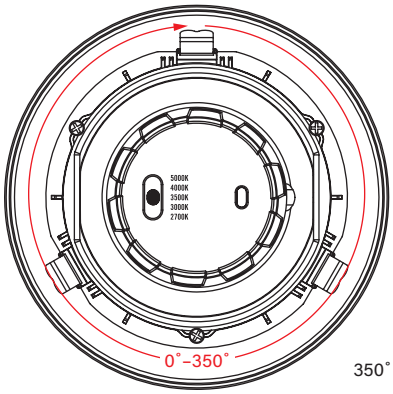

350˚ horizontal rotation

KT-LED11RD-6C-9CSF-DIM-G-X

The existing luminaire housing must be equal to or larger than over-all inner dimensions illustrated below.

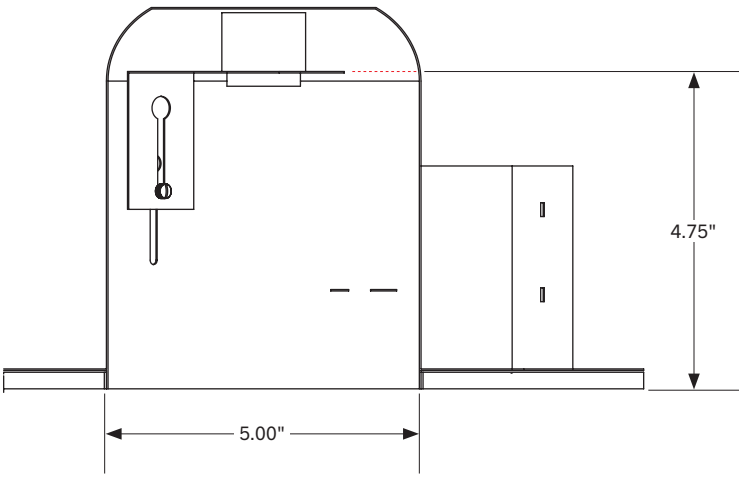

(*Installation Instructions* continued on next page)

SINCE 1945 KEYSTONE LIGHT MADE EASY

AVIVA

COLOR SELECT

KT-LEDXXRD-XC-9CSF-DIM-G-X

DOWNLIGHT RETROFIT GIMBAL TRIM

INSTALLATION INSTRUCTIONS (CONTINUED)

1. **Shut off power at the source of the recessed housing into which you are installing fixture.** Remove existing trim and CFL or incandescent bulb.

   Note: Follow all federal and local regulations when disposing of lamps and removed components.

2. Unscrew the screws on socket bracket; push bracket upward to the top.

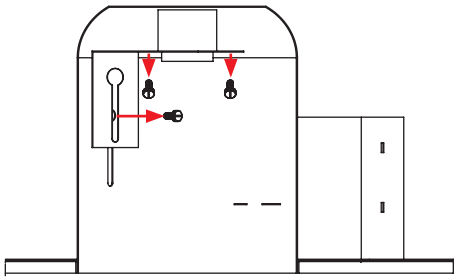

3. Remove existing socket mounting plate from the housing, then remove lamp socket from the plate.

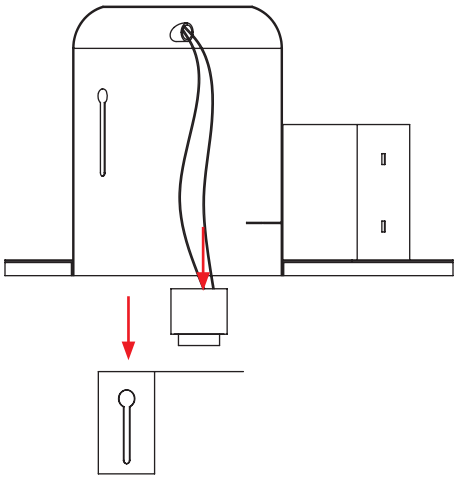

4. Screw E26 adaptor into the socket.

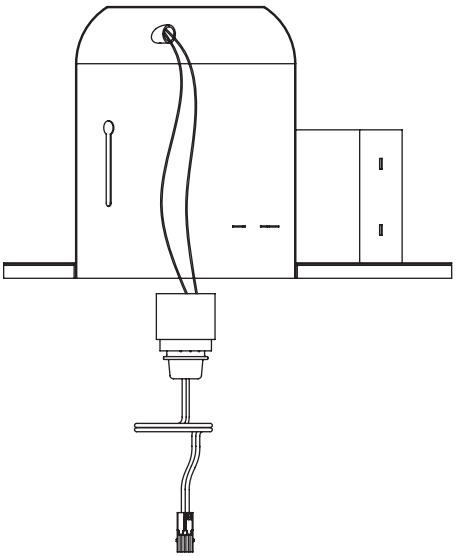

5. Select desired CCT using adjustment switch on driver box (see *Color Select (CCT) Adjustment* on page 3).

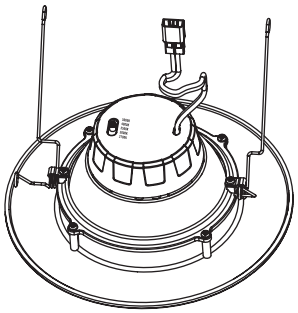

6. Plug E26 base cable connection into the recessed housing, ensuring that kit is grounded .

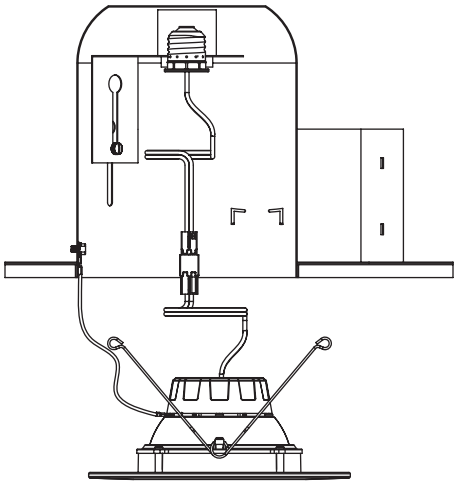

(*Installation Instructions* continued on next page)

SINCE 1945 KEYSTONE LIGHT MADE EASY

AVIVA

COLOR SELECT

KT-LEDXXRD-XC-9CSF-DIM-G-X

DOWNLIGHT RETROFIT GIMBAL TRIM

INSTALLATION INSTRUCTIONS (CONTINUED)

7. Squeeze torsion springs together as shown and install into torsion spring brackets inside recessed housing. For proper installation, the torsion springs should be seated within the brackets and on both sides of the housing.

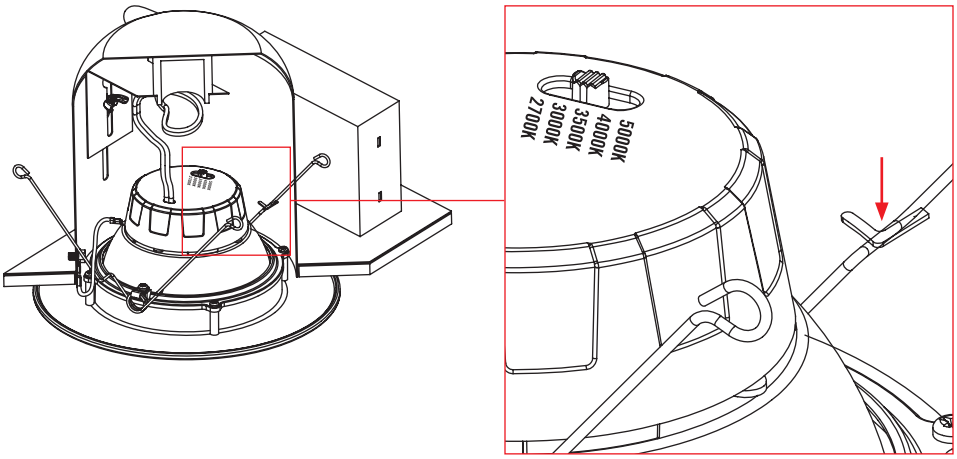

8. Carefully route wires into fixture and push recessed kit up flush to ceiling surface.

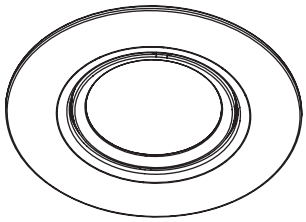

9. Push the edge of the bezel to tilt lens vertically and rotate lens assembly horizontally towards the surface to be illuminated.

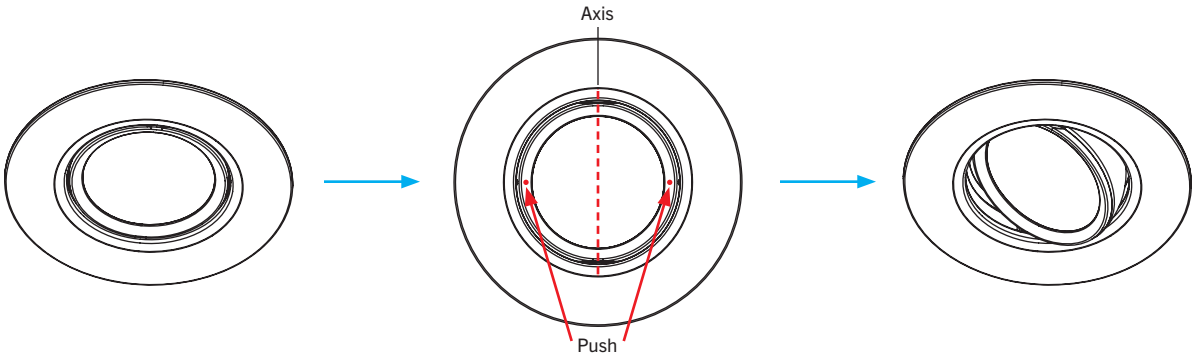

GIMBAL FEATURES

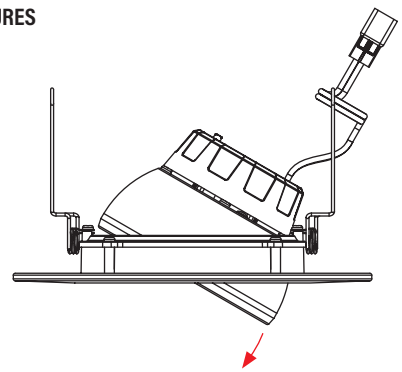

Up to 30º vertical tilt

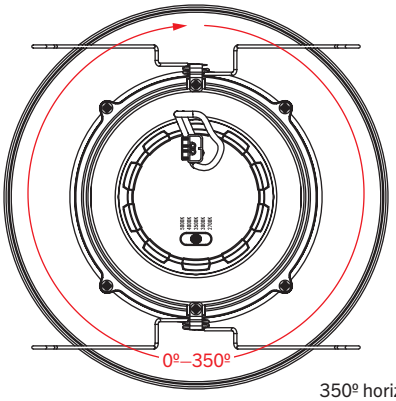

350º horizontal rotation

SINCE 1945 KEYSTONE LIGHT MADE EASY

AVIVA

COLOR SELECT

KT-LEDXXRD-XC-9CSF-DIM-G-X

DOWNLIGHT RETROFIT GIMBAL TRIM

OPTIONAL ACCESSORIES (SOLD SEPARATELY)

GU24 ADAPTOR

Catalog Number	Description	UPC	Easy Code
KT-ADPT-RD-GU24	GU24 Adaptor for downlight retrofit trim	843654137568	WTQ-04

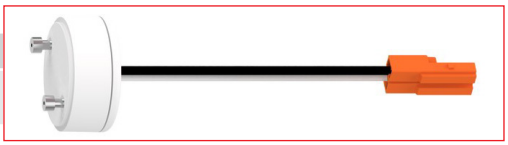

TORSION-SPRING ADAPTOR

Catalog Number	Description	UPC	Easy Code
KT-ADPT-RD-6C-TS	Torsion-spring adaptor for 5" / 6" downlight retrofit gimbal trim	843654137667	GGR-44

ORDERING INFORMATION

Catalog Number	UPC	Easy Code	Energy Star ID
KT-LED8RD-4C-9CSF-DIM-G	843654137476	FKR-02	3555649
KT-LED8RD-4C-9CSF-DIM-G-B	843654166766	RKQ-88	3942826
KT-LED11RD-6C-9CSF-DIM-G	843654137483	PLO-50	3549957
KT-LED11RD-6C-9CSF-DIM-G-B	843654166773	COZ-86	3942827

CATALOG NUMBER BREAKDOWN

KT-	LED	XX	RD-	X	C-	9	CSF-	DIM-	G-	X
1	2	3	4	5	6	7	8	9	10	11	12

1 Keystone Technologies
2 LED Technology
3 Wattage
4 Fixture Type
5 Nominal Size
6 Shape
7 CRI
8 Color Select
9 Color Select Designation
10 TRIAC Dimming
11 Gimbal Construction
12 Housing Color

4 Fixture Type

RD	Recessed Downlight

5 Nominal Size

4	4" Nominal
6	6" Nominal

6 Shape

C	Circular

7 CRI

9	90

9 Color Select Designation

F	2700/3000/3500/4000/5000K

12 Housing Color

	White
B	Black