IN BOX® Cover Kit *installs in FLBC4500*

NEW!

Put a RECESSED Receptacle in New Concrete – The Easy Way!

FLBC4500

CATALOG NUMBER	UPC/DCI/NAED MFG. #018997	DESCRIPTION FINISH/COLOR, COVER STYLE	UNIT PKG	STD PKG
FLBC4500	22010	4.5" Non-metallic ROUND BOX for Concrete Pours (conduit plugs, mud cover)	1	5
IN BOX® COVER KIT WITH METAL FLANGE, BLANK AND IN-USE SLOTTED PLUG COVER				
FLBC4560DMB	09105	RECESSED COVER KIT – Brass, w/ Decorator Style Receptacle	1	1
FLBC4560DNL	09106	RECESSED COVER KIT – Nickel plated Brass, w/ Decorator Style Receptacle	1	1
IN BOX® COVER KIT WITH PLASTIC FLANGE, BLANK AND IN-USE SLOTTED PLUG COVER				
FLBC4560DBL	09100	RECESSED COVER KIT – Black, w/ Black Decorator Style Receptacle	1	1
FLBC4560DBR	09101	RECESSED COVER KIT – Dark Brown, w/ Dark Brown Decorator Style Receptacle	1	1
FLBC4560DCA	09102	RECESSED COVER KIT – Caramel, w/ Dark Brown Decorator Style Receptacle	1	1
FLBC4560DGY	09103	RECESSED COVER KIT – Gray, w/ Black Decorator Style Receptacle	1	1
FLBC4560DLA	09104	RECESSED COVER KIT – Light Almond, w/ Light Almond Decorator Style Receptacle	1	1

KITS INCLUDE
Leveling Ring Assembly (w/ Carpet Flange, Funnel & UL Listed 15 A Decorator Receptacle), Low Voltage Divider, Blank Cover w/ Gasket, In-Use Slotted Cover, Low-Voltage Plug, #8 x 5/8" Lg. Flat Head Screw

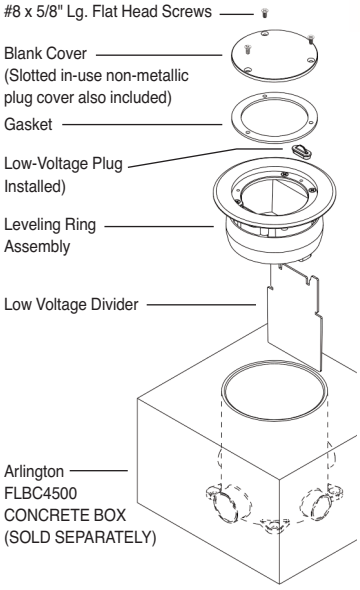

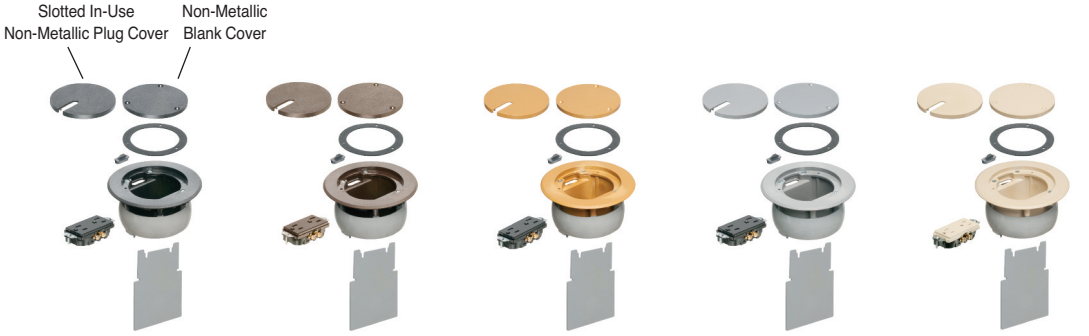

FLBC4560DBL Black Cover | **FLBC4560DBR** Dark Brown Cover | **FLBC4560DCA** Caramel Cover | **FLBC4560DGY** Gray Cover | **FLBC4560DCA** Light Almond Cover

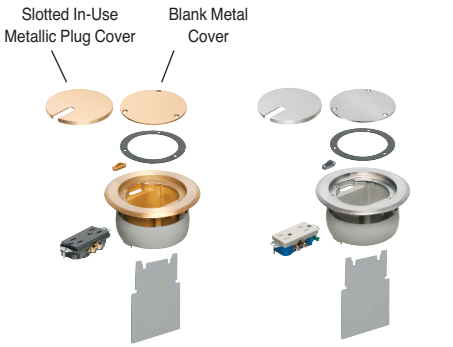

FLBC4560DMB Brass Metal Cover | **FLBC4560DNL** Nickel Plated Metal Cover

NOTE: Receptacle ships installed in the leveling ring assembly in all kits

c UL us

1 Stauffer Industrial Park
Scranton, PA 18517
800/233.4717
Fax 570/562.0646
www.aifittings.com

Distributed by

© 2016 Arlington Industries, Inc.