Sure-Lites

DESCRIPTION

The LED APX series is UL924 code compliant solution for indoor exit requirements. It is available as AC only (APX6) or self-powered (APX7) with a maintenance free nickel cadmium battery. The self-powered version will operate for a minimum of 90 minutes during a power outage. All models feature an LED source available in red or green, are field configurable for single or double face and are universal mount (ceiling, wall or end). The polycarbonate housing is available in white or black.

Catalog #		Type
Project		
Comments		Date
Prepared by		

SPECIFICATION FEATURES

Electrical
- Dual voltage input 120/277 VAC, 60Hz
- Solid-State voltage limited charger (APX7)
- Brownout circuit (APX7)
- Test switch / Power indicator light (APX7)

Housing Construction
- All components are injection molded, color stable, high impact thermoplastic material
- Available in a white or black finish
- Components are of snap-fit construction to facilitate under 5-minute installation
- Reinforcing ribs throughout to provide maximum strength connections
- All components including battery and electronics are located inside the exit housing
- Snap-out or snap-in chevron directional indicators have full 3/4" stroke
- Universal exits can be field configured as single face or double face
- Snap-fit canopy with mounting screws included with all exits
- Exit can be ceiling, wall, or end mounted
- Universal J-box mounting pattern
- Operating temperature range 10 °C to 40 °C

Battery
- Sealed nickel cadmium
- Maintenance free, long life
- Full recharge time: 24 hrs (max.)

Code Compliance
- UL 924 Listed
- UL Damp Location Listed
- Life Safety NFPA 101
- NEC/OSHA
- Most State and Local Codes
- operatig temperature range 10 °C to 40 °C
- California Energy Code compliant

Lamp Data
- AC LED: Long life LED lamps provide uniform diffused illumination
- DC: LED DC lamps (Brighter in emergency mode, APX7)

Warranty
- Five-year warranty
- Seven-year prorated battery warranty

T20 Certified to California Title 20 Appliance Database

UL LISTED

NFPA

OSHA

10°to 40°C operating temperature range

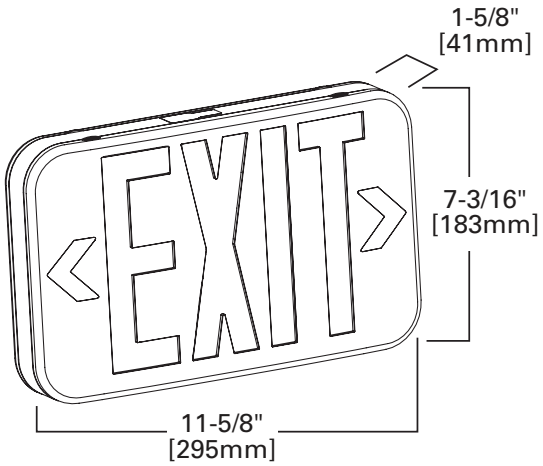

APX SERIES

THERMOPLASTIC EXIT
AC ONLY SELF POWERED
EMERGENCY
LED LAMPS
EXIT LIGHTING

ENERGY DATA

Maximum power consumption under all charge conditions:

Sealed Nickel Cadmium Battery LED Exits - Red
Input Power:
120V = .99W
277V = 1.14W
Input Current (Max.):
120V = .07A
277V - .07A
Power Factor:
120V = >.12
277V = >.06

Energy Data AC Only LED Exits - Red
Input Power:
120V = 1.31W
277V = 1.74W
Input Current (Max.):
120V = .07A
277V - .08A
Power Factor:
120V = >.17
277V = >.08

LED Exits - Green
Input Power:
120V = .93W
277V = 1.05W
Input Current (Max.):
120V = .07A
277V = .07A
Power Factor:
120V = >.11
277V = >.05

LED Exits - Green
Input Power:
120V = 1.33W
277V = 1.76W
Input Current (Max.):
120V = .07A
277V = .07A
Power Factor:
120V = >.05
277V = >.03

ORDERING INFORMATION

SAMPLE NUMBER: APX7RBK

Series	Battery	Face Options	Letter Colors	Housing Color	Remote Heads Powered
APX	6 = no battery (AC only) 7 = nickel cadmium battery	_ = Universal	**R** = Red **G** = Green	_ = White **BK** = Black	**APX6R,APX6G,APX6RBK,APX6GBK** **APX7R,APX7G,APX7RBK,APX7GBK**

EATON
Powering Business Worldwide

TECHNICAL DATA

Lamps
Self-Powered LED versions of the All Pro Emergency Series Exits use energy efficient, long life LEDs to provide uniform diffuse illumination of the exit face. Both the red and green LEDs require no maintenance and consume a total of 2.0 watts. The low operating costs and zero maintenance requirement makes LED lamps the wisest choice for exit signs today. Emergency illumination is provided by LED lamps,

Housing Construction
Rugged, durable, injection molded thermoplastic materials are used throughout the All Pro Emergency Series Exits. All structural components are designed with reinforcing ribs to add additional rigidity and to maximize structural integrity. These materials are impact and scratch resistant, and they have been UV stabilized to resist discoloration due to age and ultraviolet radiation. All components are designed to be of snap-fit construction - no mechanical fasteners - to facilitate installation in under 5-minutes. Any components required for installation (wirenuts, wire leads, universal metal J-box bracket, etc.) are all included with each exit. The universal design of the All Pro Series Exits enables universal exits to be configured as single face or double face in the field. All Self-Powered All Pro Series Exits can be wall, ceiling, or end mounted; a rugged, snap-fit, low profile canopy with captive screws is included with every exit for ceiling and end mounting applications. The housings are available with a white or black finish.

Lens
Lenses are made from durable impact resistant thermoplastic. All exit faces are designed with full 3/4″ stroke snap-out or snap-in chevron directional indicators to insure maximum visibility and compliance with the latest codes.

Solid-State Charger (APX7)
Supplied with a 120/277 VAC, voltage regulated solid-state charger. Immediately upon restoration of AC current after a power failure, the charger provides a high charge rate. The charge circuit reacts to the condition of the battery and regulates the charging process in order to maintain peak battery capacity and maximize battery life. Solid-state construction recharges the battery following a power failure in accordance with UL 924.

Brownout Circuit (APX7)
The brownout circuit on All Pro exits monitors the flow of AC current to the exit and activates the emergency lighting system when a predetermined reduction of AC power occurs. This dip in voltage will cause most ballasted fixtures to extinguish causing loss of normal lighting even though a total power failure has not occurred.

Test Switch/Power Indicator Light (APX7)
A test switch located on the bottom of the exit permits the activation of the emergency circuit for a complete operational systems check. The Power Indicator Light provides visual assurance that the AC power is on.

Sealed Nickel Cadmium Battery
All Pro Emergency sealed nickel cadmium batteries are maintenance free with a life expectancy of 10 years. The sealed rechargeable nickel cadmium battery offers high discharge rates and stable performance over a wide range of temperatures. The specially designed resealable vent automatically controls cell pressure, assuring safety and reliability. This battery is best suited for harsh ambient temperatures because the electrolyte is not active in the electrochemical process.

Warranty
The All Pro Series exit signs are backed by a five-year warranty.

Eaton
1121 Highway 74 South
Peachtree City, GA 30269
P: 770-486-4800
www.eaton.com/lighting

Specifications and dimensions subject to change without notice.

Sure-Lites

DESCRIPTION

The LED APX series is UL924 code compliant solution for indoor exit requirements. It is available as AC only (APX6) or self-powered (APX7) with a maintenance free nickel cadmium battery. The self-powered version will operate for a minimum of 90 minutes during a power outage. All models feature an LED source available in red or green, are field configurable for single or double face and are universal mount (ceiling, wall or end). The polycarbonate housing is available in white or black.

Catalog #		Type
Project		
Comments		Date
Prepared by		

SPECIFICATION FEATURES

Electrical
- Dual voltage input 120/277 VAC, 60Hz
- Solid-State voltage limited charger (APX7)
- Brownout circuit (APX7)
- Test switch / Power indicator light (APX7)

Housing Construction
- All components are injection molded, color stable, high impact thermoplastic material
- Available in a white or black finish
- Components are of snap-fit construction to facilitate under 5-minute installation
- Reinforcing ribs throughout to provide maximum strength connections
- All components including battery and electronics are located inside the exit housing
- Snap-out or snap-in chevron directional indicators have full 3/4" stroke
- Universal exits can be field configured as single face or double face
- Snap-fit canopy with mounting screws included with all exits
- Exit can be ceiling, wall, or end mounted
- Universal J-box mounting pattern
- Operating temperature range 10 °C to 40 °C

Battery
- Sealed nickel cadmium
- Maintenance free, long life
- Full recharge time: 24 hrs (max.)

Code Compliance
- UL 924 Listed
- UL Damp Location Listed
- Life Safety NFPA 101
- NEC/OSHA
- Most State and Local Codes
- operatig temperature range 10 °C to 40 °C
- California Energy Code compliant

Lamp Data
- AC LED: Long life LED lamps provide uniform diffused illumination
- DC: LED DC lamps (Brighter in emergency mode, APX7)

Warranty
- Five-year warranty
- Seven-year prorated battery warranty

T20 Certified to California Title 20 Appliance Database

UL LISTED

NFPA

OSHA

10°to 40°C operating temperature range

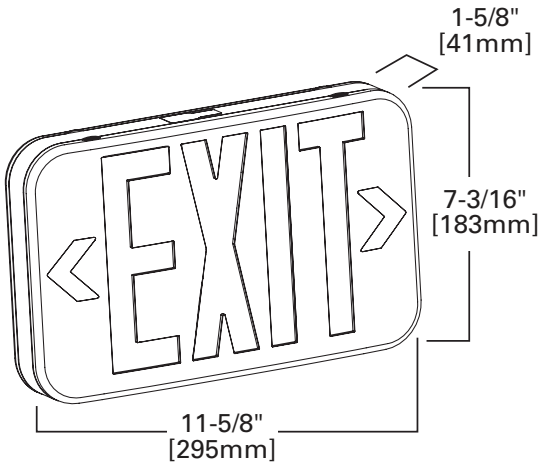

APX SERIES

THERMOPLASTIC EXIT
AC ONLY SELF POWERED
EMERGENCY
LED LAMPS
EXIT LIGHTING

ENERGY DATA

Maximum power consumption under all charge conditions:

Sealed Nickel Cadmium Battery LED Exits - Red
Input Power:
120V = .99W
277V = 1.14W
Input Current (Max.):
120V = .07A
277V - .07A
Power Factor:
120V = >.12
277V = >.06

Energy Data AC Only LED Exits - Red
Input Power:
120V = 1.31W
277V = 1.74W
Input Current (Max.):
120V = .07A
277V - .08A
Power Factor:
120V = >.17
277V = >.08

LED Exits - Green
Input Power:
120V = .93W
277V = 1.05W
Input Current (Max.):
120V = .07A
277V = .07A
Power Factor:
120V = >.11
277V = >.05

LED Exits - Green
Input Power:
120V = 1.33W
277V = 1.76W
Input Current (Max.):
120V = .07A
277V = .07A
Power Factor:
120V = >.05
277V = >.03

ORDERING INFORMATION

SAMPLE NUMBER: APX7RBK

Series	Battery	Face Options	Letter Colors	Housing Color	Remote Heads Powered
APX	6 = no battery (AC only) 7 = nickel cadmium battery	_ = Universal	**R** = Red **G** = Green	_ = White **BK** = Black	**APX6R,APX6G,APX6RBK,APX6GBK** **APX7R,APX7G,APX7RBK,APX7GBK**

EATON
Powering Business Worldwide

TECHNICAL DATA

Lamps
Self-Powered LED versions of the All Pro Emergency Series Exits use energy efficient, long life LEDs to provide uniform diffuse illumination of the exit face. Both the red and green LEDs require no maintenance and consume a total of 2.0 watts. The low operating costs and zero maintenance requirement makes LED lamps the wisest choice for exit signs today. Emergency illumination is provided by LED lamps,

Housing Construction
Rugged, durable, injection molded thermoplastic materials are used throughout the All Pro Emergency Series Exits. All structural components are designed with reinforcing ribs to add additional rigidity and to maximize structural integrity. These materials are impact and scratch resistant, and they have been UV stabilized to resist discoloration due to age and ultraviolet radiation. All components are designed to be of snap-fit construction - no mechanical fasteners - to facilitate installation in under 5-minutes. Any components required for installation (wirenuts, wire leads, universal metal J-box bracket, etc.) are all included with each exit. The universal design of the All Pro Series Exits enables universal exits to be configured as single face or double face in the field. All Self-Powered All Pro Series Exits can be wall, ceiling, or end mounted; a rugged, snap-fit, low profile canopy with captive screws is included with every exit for ceiling and end mounting applications. The housings are available with a white or black finish.

Lens
Lenses are made from durable impact resistant thermoplastic. All exit faces are designed with full 3/4″ stroke snap-out or snap-in chevron directional indicators to insure maximum visibility and compliance with the latest codes.

Solid-State Charger (APX7)
Supplied with a 120/277 VAC, voltage regulated solid-state charger. Immediately upon restoration of AC current after a power failure, the charger provides a high charge rate. The charge circuit reacts to the condition of the battery and regulates the charging process in order to maintain peak battery capacity and maximize battery life. Solid-state construction recharges the battery following a power failure in accordance with UL 924.

Brownout Circuit (APX7)
The brownout circuit on All Pro exits monitors the flow of AC current to the exit and activates the emergency lighting system when a predetermined reduction of AC power occurs. This dip in voltage will cause most ballasted fixtures to extinguish causing loss of normal lighting even though a total power failure has not occurred.

Test Switch/Power Indicator Light (APX7)
A test switch located on the bottom of the exit permits the activation of the emergency circuit for a complete operational systems check. The Power Indicator Light provides visual assurance that the AC power is on.

Sealed Nickel Cadmium Battery
All Pro Emergency sealed nickel cadmium batteries are maintenance free with a life expectancy of 10 years. The sealed rechargeable nickel cadmium battery offers high discharge rates and stable performance over a wide range of temperatures. The specially designed resealable vent automatically controls cell pressure, assuring safety and reliability. This battery is best suited for harsh ambient temperatures because the electrolyte is not active in the electrochemical process.

Warranty
The All Pro Series exit signs are backed by a five-year warranty.

Eaton
1121 Highway 74 South
Peachtree City, GA 30269
P: 770-486-4800
www.eaton.com/lighting

Specifications and dimensions subject to change without notice.