LEDVANCE.COM/EN-US

LEDVANCE LAMPS
HID REPLACEMENT HIGH OUTPUT SELECTABLE LAMPS

LEDVANCE

LEDVANCE LAMP SPECIFICATION DATA

Catalog #	Comments
Project	
Type	
Prepared by	

PERFORMANCE CLASS™

INTEGRATED DRIVER
120-277VAC Type-B ballast bypass

QUALITY LIGHT
CRI >80, R9 >0

MEETS LATEST UTILITY STANDARDS
DLC 6.0 Standard

ENERGY EFFICIENT
Efficacy up to 167 LPW

FLEXIBLE
Rated for open and enclosed luminaires

COLOR SELECTABLE
3000/4000/5000K selectable color

UNIFORM ILLUMINATION
336-degree omnidirectional beam angle

FIELD ADJUSTABLE OUTPUT OPTIONS
3 Level selectable output

CONTROLS READY OPTIONS
Screw-in LEDVANCE Standalone & Network sensors on 80W and above options

OPTIONAL ACCESSORIES
E26 MED to EX39 base adapter and lamp extenders available

CERTIFICATIONS & LISTINGS
- UL listed for US & Canada
- RoHS Compliant
- FCC Compliant
- Damp Location rated
- IP64
- Controls Ready
- Controls Ready via: Screw-in
- LINK™

AMBIENT OPERATING TEMPERATURE
- -40°F to 122°F (-40°C to 50°C)

ELECTRICAL
- Input voltage: 120-277V
- Surge Protection: up to 4KV
- Power Factor: >=0.9 @120V
- THD: <= 20%
- Not suitable for use with dimmers

DESCRIPTION
LEDVANCE LED HID Replacement High Output Lamp family provides versatile, energy-efficient retrofits for metal halide and high-pressure sodium lamps in wall-packs, canopies, and shoeboxes. Type B Ballast bypass omnidirectional light with field-adjustable CCT and wattage. DLC 6.0 compliant. Optional standalone or networked lighting controls.

APPLICATION
- Parking lots, warehouses, production areas
- Parks
- Security lighting
- Street lighting
- Factory
- Walkways
- Shopping malls
- Chain stores, retail shops

RATED LIFE
- 50,000 hours (L_{70}) @ 77°F/25°C

WARRANTY
- 5-Year Limited Warranty
- NLB Trusted Warranty Program

ORDERING GUIDE

LED	XXX	HIDR	8	SC2	XXX
LED	**WATTAGE**	**LAMP TYPE**	**CRI**	**CCT**	**BASE TYPE**
LED = LED Lamps and Retrofits	12 = 12W 18 = 18W 27 = 12/18/27W 36 = 18/27/36W 45 = 27/36/45W 54 = 36/45/54W 80 = 54/63/80W 100 = 63/80/100W 120 = 80/100/120W	HIDR = HID Replacement	8 = >80, R9>0	SC2 = Selectable 3000/4000/ 5000K	MED = E26 Medium Base MOG = EX39 Mogul Base

ORDERING INFORMATION

ITEM #	ORDERING ABBREVIATION	WATTAGE (W)	BASE TYPE	REPLACES	INPUT VOLTAGE	SURGE (KV)	CCT (K)	TYPICAL LUMENS (LM) 4000K	TYPICAL EFFICACY (LPW) 4000K	CRI	DLC	ORIENTATION
42721	LED12HIDR8SC2MED	12	E26 Medium	–	120-277	2.5	3000/4000/5000	1,860	155	>80	No	Any
42722	LED18HIDR8SC2MED	18	E26 Medium	35W MH	120-277	2.5	3000/4000/5000	2,800	156	>80	No	Any
42723	LED27HIDR8SC2MED	12/18/27	E26 Medium	50W MH	120-277	2.5	3000/4000/5000	4,200	156	>80	Pole/arm mount decorative	Any
42724	LED36HIDR8SC2MED	18/27/36	E26 Medium	70W MH	120-277	2.5	3000/4000/5000	5,600	156	>80	Pole/arm mount decorative	Any
42725	LED45HIDR8SC2MOG	27/36/45	EX39 Mogul	70W MH	120-277	2.5	3000/4000/5000	7,000	156	>80	Pole/arm mount decorative	Any
42726	LED54HIDR8SC2MOG	36/45/54	EX39 Mogul	100W MH	120-277	2.5	3000/4000/5000	8,400	156	>80	Pole/arm mount decorative	Any
42727*	LED80HIDR8SC2MOG	54/63/80	EX39 Mogul	150W MH	120-277	4	3000/4000/5000	13,360	167	>80	High Bay	Vertical (±20°)
42728*	LED100HIDR8SC2MOG	63/80/100	EX39 Mogul	175W MH	120-277	4	3000/4000/5000	16,500	165	>80	High Bay	Vertical (±20°)
42729*	LED120HIDR8SC2MOG	80/100/120	EX39 Mogul	250W MH	120-277	4	3000/4000/5000	20,040	167	>80	High Bay	Vertical (±20°)

*Controls Ready

PHYSICAL INFORMATION

DESCRIPTION	DIAMETER (B)	LENGTH (A)	WEIGHT
LED12HIDR8SC2MED	2.36in (60mm)	5.39in (137mm)	0.51lb (0.23kg)
LED18HIDR8SC2MED	2.36in (60mm)	5.83in (148mm)	0.55lb (0.25kg)
LED27HIDR8SC2MED	2.36in (60mm)	6.81in (173mm)	0.62lb (0.28kg)
LED36HIDR8SC2MED	3.35in (85mm)	7.56in (192mm)	1.19lb (0.54kg)
LED45HIDR8SC2MOG	3.35in (85mm)	9.96in (253mm)	1.43lb (0.65kg)
LED54HIDR8SC2MOG	3.35in (85mm)	9.96in (253mm)	1.46lb (0.66kg)
LED80HIDR8SC2MOG	5.12in (130mm)	9.96in (253mm)	3.26lb (1.48kg)
LED100HIDR8SC2MOG	5.12in (130mm)	10.43in (265mm)	3.33lb (1.51kg)
LED120HIDR8SC2MOG	5.12in (130mm)	11.26in (286mm)	3.42lb (1.55kg)

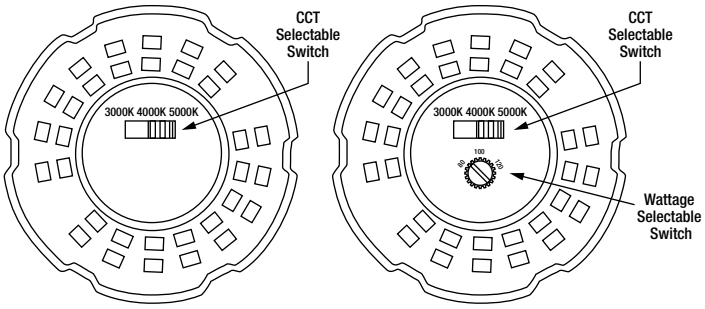

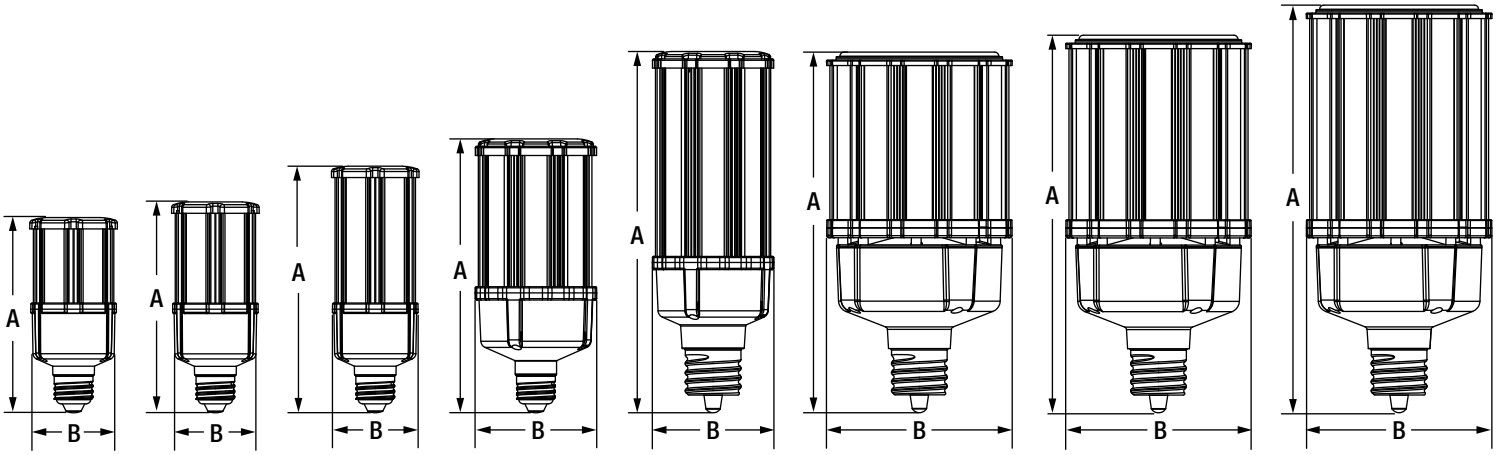

INSTALLATION

INSTALLATION GUIDE

OPTIONAL ACCESSORIES

ITEM #	ORDERING ABBREVIATION	PRODUCT DESCRIPTION	
	ADAPTERS & EXTENDERS		
75055	LEDADAPTERMOGULBASE	E26 Medium to EX39 Mogul Adapter	
42718	SOCKETEXTMED	E26 Medium Base Socket Extender — Adds 1.22in (31mm)	
42719	SOCKEXTMOG	EX39 Mogul Base Socket Extender — Adds 2.95in (75mm)	
	STANDALONE CONTROLS		
62664	HIGHBAYPIRMOTIONDAYSENSOR2	LED HIDR Accessory — PIR Motion and Daylight Sensor 39ft	
65622	HIGHBAYMOTIONDAYSENSOR	LED HIDR Accessory — Microwave Motion and Daylight Sensor 49ft	
65623	REMOTEMOTIONDAY001	Remote Control for PIR/Microwave Motion/Daylight Sensor	
	NETWORKED LIGHTING CONTROLS		
75943	ADAPTER3P3.5SC	Sensor Adapter from 3-pin connector to 3.5mm connector	
62630	ADAPTERAUX12VBLE	LEDVANCE LINK™ Controller 3.5mm AUX12V BLE	
62634	SENSORHBPIRAUX12VBLE	LED HIDR Accessory — LEDVANCE LINK™ PIR Motion and Bluetooth® Mesh Controller 3.5mm 40ft	
62636	WALLSWITCH5KEYBLE	LINK™ Wireless Controller 5 Key Battery BLE	
75935	CTRLAFC3PDIP66SR	SILVAIR Plug & Play PIR Sensor/Controller 3-Pin 40ft	
75937	SENSA40PIR3PDIP66SR	SILVAIR Plug & Play Fixture Controller Range Extender and Timekeeper 3-Pin	

42718

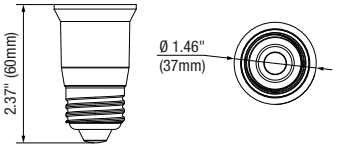

42719

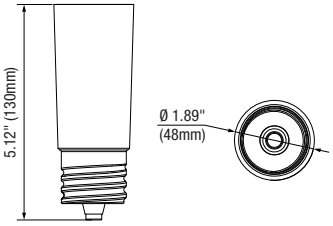

ADDITIONAL SPECIFICATIONS

- Suitable for damp locations.
- Dimming function can only be enabled either through a physical knob on 27W–120W lamps or by pairing with a SYLVANIA motion sensor and remote control (purchased separately) for 80W–120W lamps. Dimming is not compatible with other dimmers.
- Suitable for open & enclosed luminaires. Follow recommended orientation, temperature limits and luminaire compartment sizes.
- Minimum lamp compartment dimensions: 420mm × 210mm × 210mm (54W and greater).
- Not suited with outdoor fixtures with air vents.
- Should not be directly exposed to water.

LEDVANCE NORTH AMERICAN HEADQUARTERS

LEDVANCE LLC.
181 Ballardvale Street, Suite 203
Wilmington, MA 01887
Phone: +1 978 753 5000

LEDVANCE CANADIAN HEADQUARTERS

LEDVANCE LTD./LTE.
5450 Explorer Drive, Suite 100
Mississauga, Ontario L4W 5N1
Phone: +1 905 361 93 33

LEDVANCE.COM/EN-US

LEDVANCE is a registered trademark.
The Bluetooth® word mark and logos are registered trademarks owned by the Bluetooth SIG, Inc. and any use of such marks by LEDVANCE LLC is under license.
All other trademarks are those of their respective owners.
Specifications subject to change without notice.

© 2026 LEDVANCE LLC

LEDVANCE.COM/EN-US

LEDVANCE LAMPS
HID REPLACEMENT HIGH OUTPUT SELECTABLE LAMPS

LEDVANCE

LEDVANCE LAMP SPECIFICATION DATA

Catalog #	Comments
Project	
Type	
Prepared by	

PERFORMANCE CLASS™

INTEGRATED DRIVER
120-277VAC Type-B ballast bypass

QUALITY LIGHT
CRI >80, R9 >0

MEETS LATEST UTILITY STANDARDS
DLC 6.0 Standard

ENERGY EFFICIENT
Efficacy up to 167 LPW

FLEXIBLE
Rated for open and enclosed luminaires

COLOR SELECTABLE
3000/4000/5000K selectable color

UNIFORM ILLUMINATION
336-degree omnidirectional beam angle

FIELD ADJUSTABLE OUTPUT OPTIONS
3 Level selectable output

CONTROLS READY OPTIONS
Screw-in LEDVANCE Standalone & Network sensors on 80W and above options

OPTIONAL ACCESSORIES
E26 MED to EX39 base adapter and lamp extenders available

CERTIFICATIONS & LISTINGS
- UL listed for US & Canada
- RoHS Compliant
- FCC Compliant
- Damp Location rated
- IP64
- Controls Ready
- Controls Ready via: Screw-in
- LINK™

AMBIENT OPERATING TEMPERATURE
- -40°F to 122°F (-40°C to 50°C)

ELECTRICAL
- Input voltage: 120-277V
- Surge Protection: up to 4KV
- Power Factor: >=0.9 @120V
- THD: <= 20%
- Not suitable for use with dimmers

DESCRIPTION
LEDVANCE LED HID Replacement High Output Lamp family provides versatile, energy-efficient retrofits for metal halide and high-pressure sodium lamps in wall-packs, canopies, and shoeboxes. Type B Ballast bypass omnidirectional light with field-adjustable CCT and wattage. DLC 6.0 compliant. Optional standalone or networked lighting controls.

APPLICATION
- Parking lots, warehouses, production areas
- Parks
- Security lighting
- Street lighting
- Factory
- Walkways
- Shopping malls
- Chain stores, retail shops

RATED LIFE
- 50,000 hours (L_{70}) @ 77°F/25°C

WARRANTY
- 5-Year Limited Warranty
- NLB Trusted Warranty Program

ORDERING GUIDE

LED	XXX	HIDR	8	SC2	XXX
LED	**WATTAGE**	**LAMP TYPE**	**CRI**	**CCT**	**BASE TYPE**
LED = LED Lamps and Retrofits	12 = 12W 18 = 18W 27 = 12/18/27W 36 = 18/27/36W 45 = 27/36/45W 54 = 36/45/54W 80 = 54/63/80W 100 = 63/80/100W 120 = 80/100/120W	HIDR = HID Replacement	8 = >80, R9>0	SC2 = Selectable 3000/4000/ 5000K	MED = E26 Medium Base MOG = EX39 Mogul Base

ORDERING INFORMATION

ITEM #	ORDERING ABBREVIATION	WATTAGE (W)	BASE TYPE	REPLACES	INPUT VOLTAGE	SURGE (KV)	CCT (K)	TYPICAL LUMENS (LM) 4000K	TYPICAL EFFICACY (LPW) 4000K	CRI	DLC	ORIENTATION
42721	LED12HIDR8SC2MED	12	E26 Medium	–	120-277	2.5	3000/4000/5000	1,860	155	>80	No	Any
42722	LED18HIDR8SC2MED	18	E26 Medium	35W MH	120-277	2.5	3000/4000/5000	2,800	156	>80	No	Any
42723	LED27HIDR8SC2MED	12/18/27	E26 Medium	50W MH	120-277	2.5	3000/4000/5000	4,200	156	>80	Pole/arm mount decorative	Any
42724	LED36HIDR8SC2MED	18/27/36	E26 Medium	70W MH	120-277	2.5	3000/4000/5000	5,600	156	>80	Pole/arm mount decorative	Any
42725	LED45HIDR8SC2MOG	27/36/45	EX39 Mogul	70W MH	120-277	2.5	3000/4000/5000	7,000	156	>80	Pole/arm mount decorative	Any
42726	LED54HIDR8SC2MOG	36/45/54	EX39 Mogul	100W MH	120-277	2.5	3000/4000/5000	8,400	156	>80	Pole/arm mount decorative	Any
42727*	LED80HIDR8SC2MOG	54/63/80	EX39 Mogul	150W MH	120-277	4	3000/4000/5000	13,360	167	>80	High Bay	Vertical (±20°)
42728*	LED100HIDR8SC2MOG	63/80/100	EX39 Mogul	175W MH	120-277	4	3000/4000/5000	16,500	165	>80	High Bay	Vertical (±20°)
42729*	LED120HIDR8SC2MOG	80/100/120	EX39 Mogul	250W MH	120-277	4	3000/4000/5000	20,040	167	>80	High Bay	Vertical (±20°)

*Controls Ready

PHYSICAL INFORMATION

DESCRIPTION	DIAMETER (B)	LENGTH (A)	WEIGHT
LED12HIDR8SC2MED	2.36in (60mm)	5.39in (137mm)	0.51lb (0.23kg)
LED18HIDR8SC2MED	2.36in (60mm)	5.83in (148mm)	0.55lb (0.25kg)
LED27HIDR8SC2MED	2.36in (60mm)	6.81in (173mm)	0.62lb (0.28kg)
LED36HIDR8SC2MED	3.35in (85mm)	7.56in (192mm)	1.19lb (0.54kg)
LED45HIDR8SC2MOG	3.35in (85mm)	9.96in (253mm)	1.43lb (0.65kg)
LED54HIDR8SC2MOG	3.35in (85mm)	9.96in (253mm)	1.46lb (0.66kg)
LED80HIDR8SC2MOG	5.12in (130mm)	9.96in (253mm)	3.26lb (1.48kg)
LED100HIDR8SC2MOG	5.12in (130mm)	10.43in (265mm)	3.33lb (1.51kg)
LED120HIDR8SC2MOG	5.12in (130mm)	11.26in (286mm)	3.42lb (1.55kg)

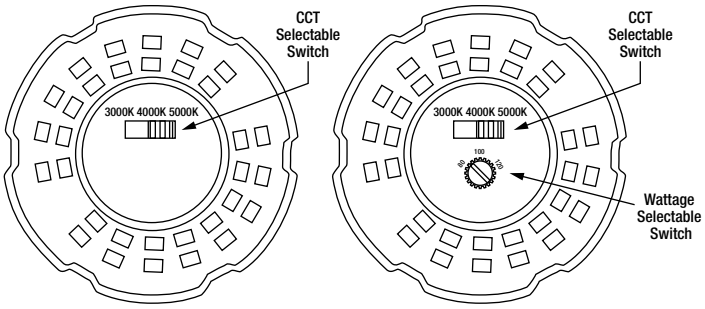

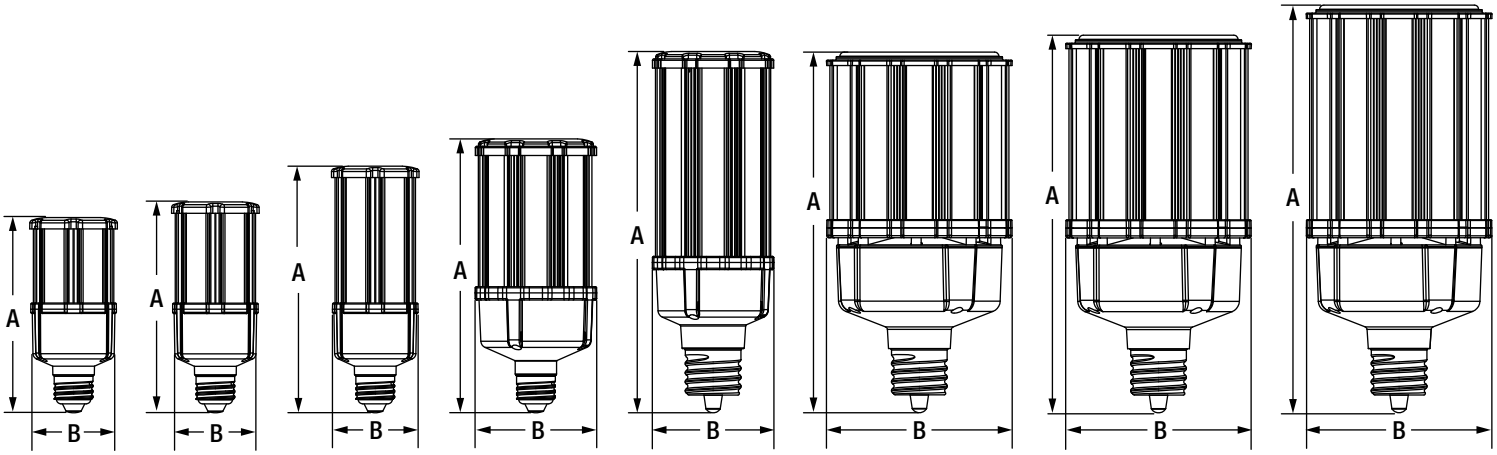

INSTALLATION

INSTALLATION GUIDE

OPTIONAL ACCESSORIES

ITEM #	ORDERING ABBREVIATION	PRODUCT DESCRIPTION	
	ADAPTERS & EXTENDERS		
75055	LEDADAPTERMOGULBASE	E26 Medium to EX39 Mogul Adapter	
42718	SOCKETEXTMED	E26 Medium Base Socket Extender — Adds 1.22in (31mm)	
42719	SOCKEXTMOG	EX39 Mogul Base Socket Extender — Adds 2.95in (75mm)	
	STANDALONE CONTROLS		
62664	HIGHBAYPIRMOTIONDAYSENSOR2	LED HIDR Accessory — PIR Motion and Daylight Sensor 39ft	
65622	HIGHBAYMOTIONDAYSENSOR	LED HIDR Accessory — Microwave Motion and Daylight Sensor 49ft	
65623	REMOTEMOTIONDAY001	Remote Control for PIR/Microwave Motion/Daylight Sensor	
	NETWORKED LIGHTING CONTROLS		
75943	ADAPTER3P3.5SC	Sensor Adapter from 3-pin connector to 3.5mm connector	
62630	ADAPTERAUX12VBLE	LEDVANCE LINK™ Controller 3.5mm AUX12V BLE	
62634	SENSORHBPIRAUX12VBLE	LED HIDR Accessory — LEDVANCE LINK™ PIR Motion and Bluetooth® Mesh Controller 3.5mm 40ft	
62636	WALLSWITCH5KEYBLE	LINK™ Wireless Controller 5 Key Battery BLE	
75935	CTRLAFC3PDIP66SR	SILVAIR Plug & Play PIR Sensor/Controller 3-Pin 40ft	
75937	SENSA40PIR3PDIP66SR	SILVAIR Plug & Play Fixture Controller Range Extender and Timekeeper 3-Pin	

42718

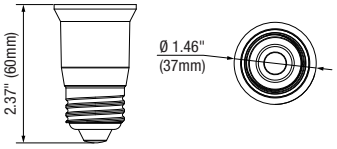

42719

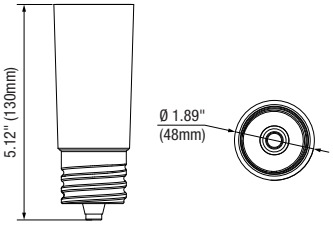

ADDITIONAL SPECIFICATIONS

- Suitable for damp locations.
- Dimming function can only be enabled either through a physical knob on 27W–120W lamps or by pairing with a SYLVANIA motion sensor and remote control (purchased separately) for 80W–120W lamps. Dimming is not compatible with other dimmers.
- Suitable for open & enclosed luminaires. Follow recommended orientation, temperature limits and luminaire compartment sizes.
- Minimum lamp compartment dimensions: 420mm × 210mm × 210mm (54W and greater).
- Not suited with outdoor fixtures with air vents.
- Should not be directly exposed to water.

LEDVANCE NORTH AMERICAN HEADQUARTERS

LEDVANCE LLC.
181 Ballardvale Street, Suite 203
Wilmington, MA 01887
Phone: +1 978 753 5000

LEDVANCE CANADIAN HEADQUARTERS

LEDVANCE LTD./LTE.
5450 Explorer Drive, Suite 100
Mississauga, Ontario L4W 5N1
Phone: +1 905 361 93 33

LEDVANCE.COM/EN-US

LEDVANCE is a registered trademark.
The Bluetooth® word mark and logos are registered trademarks owned by the Bluetooth SIG, Inc. and any use of such marks by LEDVANCE LLC is under license.
All other trademarks are those of their respective owners.
Specifications subject to change without notice.

© 2026 LEDVANCE LLC