Catalog Number	
Notes	
Type	

Surface Mount Troffer Kit

SMKSH Surface Mount Kits

FEATURES & SPECIFICATIONS

CONSTRUCTION

Designed to easily convert recessed troffers to surface mount fixtures.

Available in 1X4, 2X2, and 2X4 sizes.

See table below for fit compatibly chart.

Mounts to a variety of ceiling types.

PRODUCT SPECIFICATIONS

Housing:
22 ga cold rolled steel.

Finish:
SMKSHP version is painted after fabrication.

LISTINGS — CSA Certified to meet U.S. and Canadian standards.

WARRANTY — 1-year limited warranty. This is the only warranty provided and no other statements in this specification sheet create any warranty of any kind. All other express and implied warranties are disclaimed. Complete warranty terms located at: https://www.acuitybrands.com/-/media/abl/acuitybrands/files/support/warranty/abl-non-led-commercial-fixture-limited-warranty.pdf

Note: Actual performance may differ as a result of end-user environment and application. Specifications subject to change without notice.

ORDERING INFORMATION

Kit	Description
1X4SMKSH	Multi-Use Surface Mount Kit 1x4, Shallow Depth
2X2SMKSH	Multi-Use Surface Mount Kit 2x2, Shallow Depth
2X4SMKSH	Multi-Use Surface Mount Kit 2x4, Shallow Depth
1X4SMKSHP PAF	Multi-Use Surface Mount Kit 1X4 Post-Paint
2X2SMKSHP PAF	Multi-Use Surface Mount Kit 2X2 Post-Paint
2X4SMKSHP PAF	Multi-Use Surface Mount Kit 2X4 Post-Paint
06X2SMKSHP PAF	Lithonia SIX Surface Mount Kit 2ft Post-Paint
06X4SMKSHP PAF	Lithonia SIX Surface Mount Kit 4ft Post-Paint
06X8SMKSHP PAF	Lithonia SIX Surface Mount Kit 8ft Post-Paint

Fit Compatibility Chart

Kit	Depth	Compatible Fixtures
SMKSH	3.6"	EPANL, CPX, CPANL
SMKSHP	5.5"	SPANL, EPANL, CPANL, CPX, INDY BL, BLT, GTL[1], VTL/FSL, RTL, BZL, ENVX, STAK

Notes

1 SMKSHP not for use with 2GTL 2 fixture with emergency battery.

1X4SMKSH, 2X2SMKSH, 2X4SMKSH

SURFACE MOUNT KIT - MOUNTING DATA

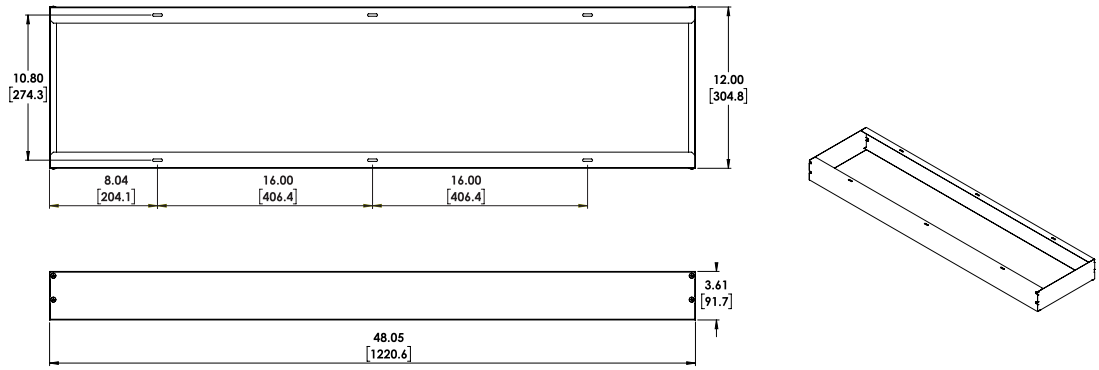

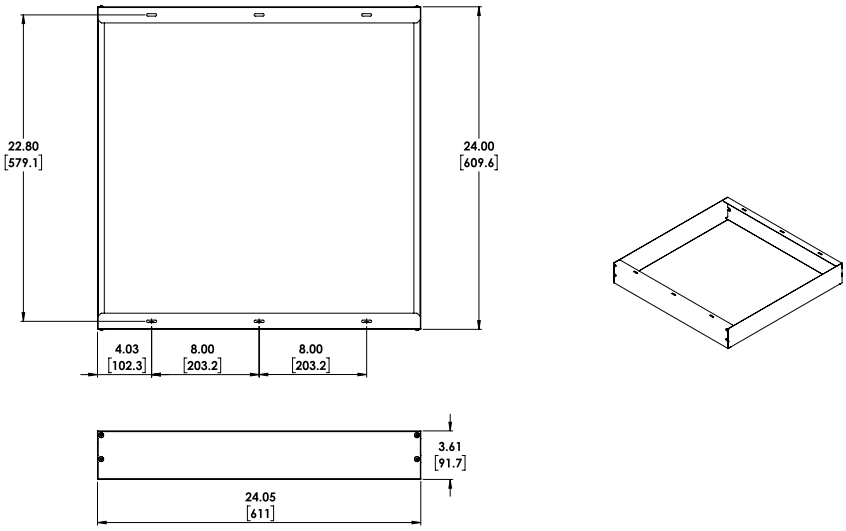

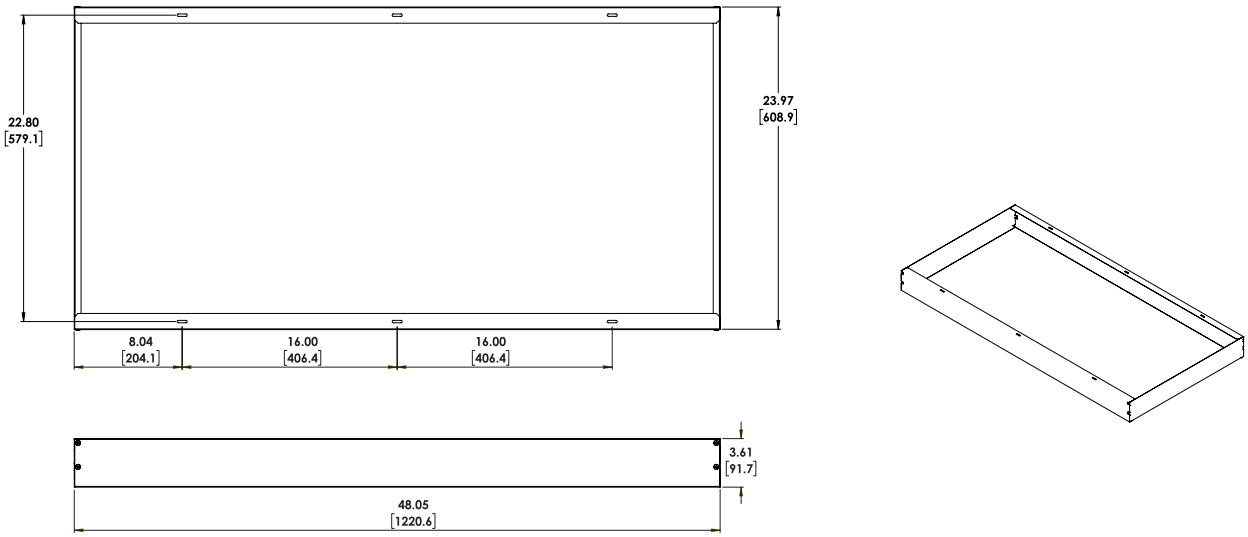

© 2019-2023 Acuity Brands Lighting, Inc. All rights reserved. Rev. 08/14/23

1X4SMKSHP, 2X2SMKSHP, 2X4SMKSHP

SURFACE MOUNT KIT - MOUNTING DATA

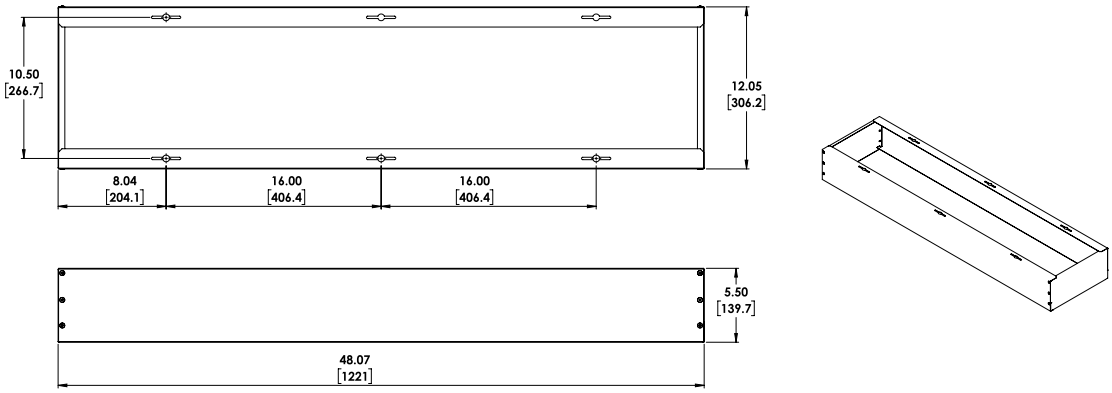

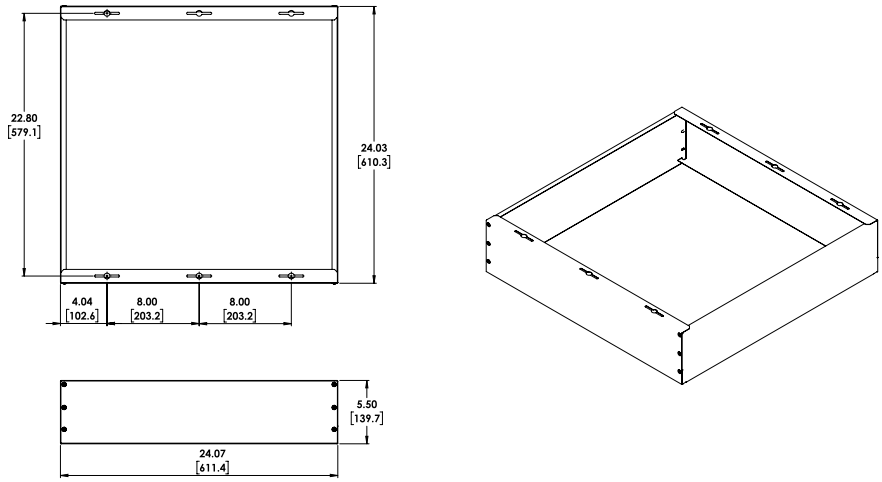

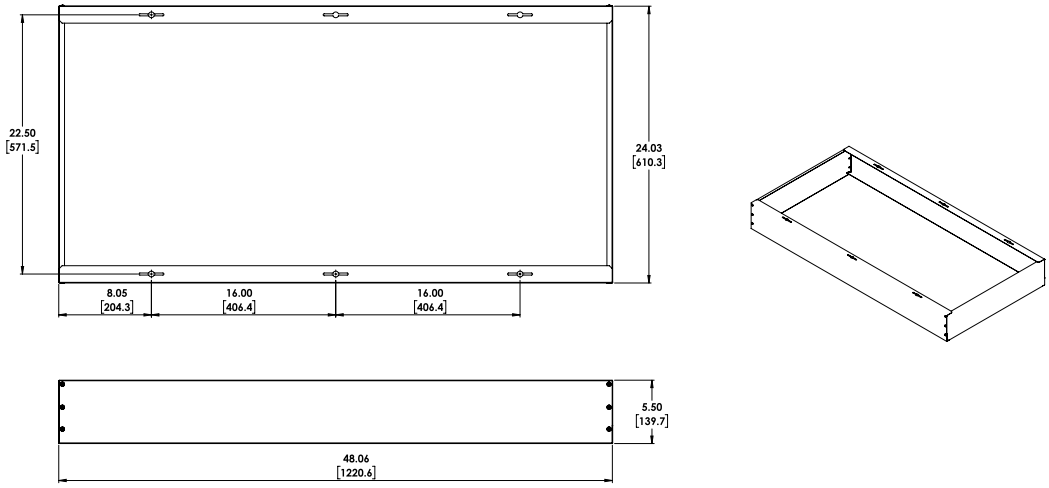

© 2019-2023 Acuity Brands Lighting, Inc. All rights reserved. Rev. 08/14/23

LSIX 2FT SMKSHP

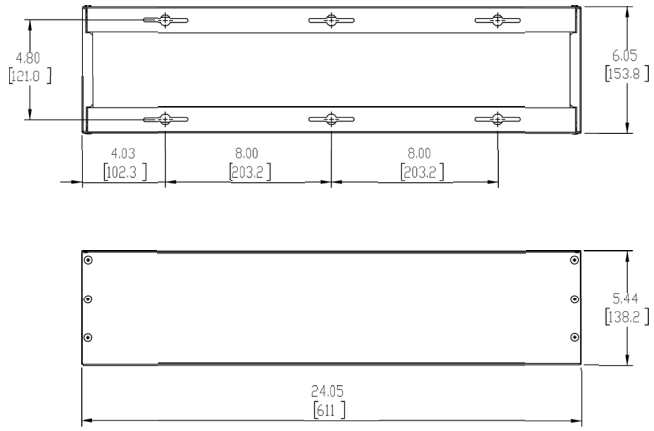

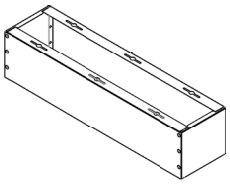

LSIX 4FT SMKSHP

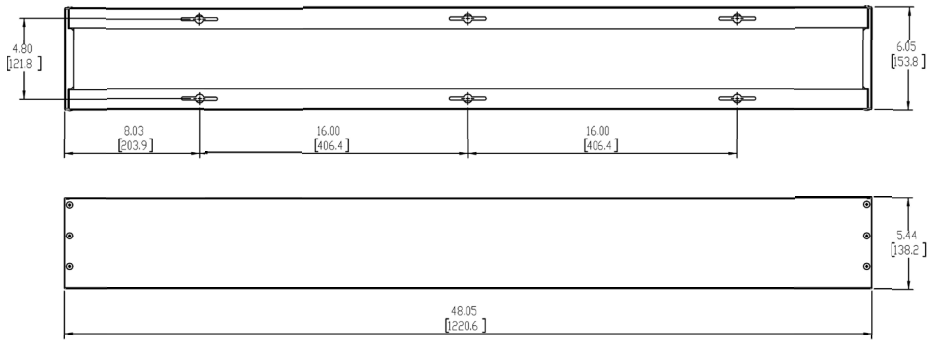

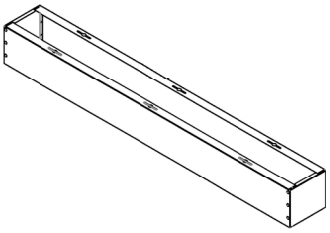

LSIX 8FT SMKSHP

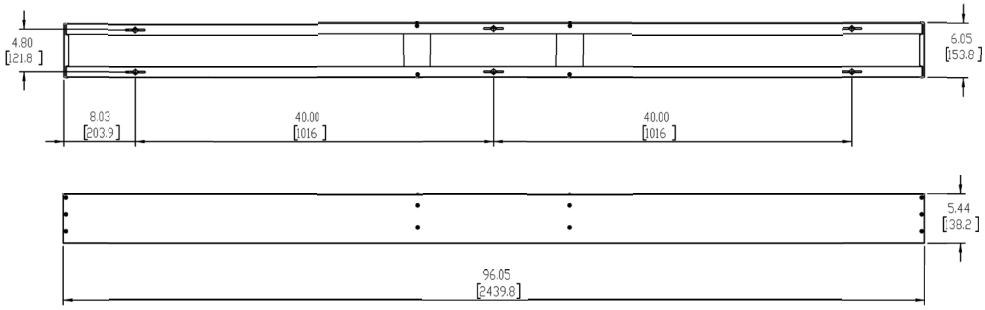

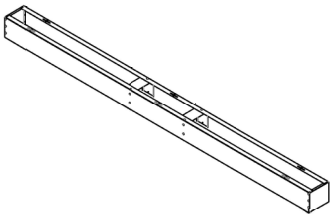

© 2019-2023 Acuity Brands Lighting, Inc. All rights reserved. Rev. 08/14/23

Catalog Number	
Notes	
Type	

Surface Mount Troffer Kit

SMKSH Surface Mount Kits

FEATURES & SPECIFICATIONS

CONSTRUCTION

Designed to easily convert recessed troffers to surface mount fixtures.

Available in 1X4, 2X2, and 2X4 sizes.

See table below for fit compatibly chart.

Mounts to a variety of ceiling types.

PRODUCT SPECIFICATIONS

Housing:
22 ga cold rolled steel.

Finish:
SMKSHP version is painted after fabrication.

LISTINGS — CSA Certified to meet U.S. and Canadian standards.

WARRANTY — 1-year limited warranty. This is the only warranty provided and no other statements in this specification sheet create any warranty of any kind. All other express and implied warranties are disclaimed. Complete warranty terms located at: https://www.acuitybrands.com/-/media/abl/acuitybrands/files/support/warranty/abl-non-led-commercial-fixture-limited-warranty.pdf

Note: Actual performance may differ as a result of end-user environment and application. Specifications subject to change without notice.

ORDERING INFORMATION

Kit	Description
1X4SMKSH	Multi-Use Surface Mount Kit 1x4, Shallow Depth
2X2SMKSH	Multi-Use Surface Mount Kit 2x2, Shallow Depth
2X4SMKSH	Multi-Use Surface Mount Kit 2x4, Shallow Depth
1X4SMKSHP PAF	Multi-Use Surface Mount Kit 1X4 Post-Paint
2X2SMKSHP PAF	Multi-Use Surface Mount Kit 2X2 Post-Paint
2X4SMKSHP PAF	Multi-Use Surface Mount Kit 2X4 Post-Paint
06X2SMKSHP PAF	Lithonia SIX Surface Mount Kit 2ft Post-Paint
06X4SMKSHP PAF	Lithonia SIX Surface Mount Kit 4ft Post-Paint
06X8SMKSHP PAF	Lithonia SIX Surface Mount Kit 8ft Post-Paint

Fit Compatibility Chart

Kit	Depth	Compatible Fixtures
SMKSH	3.6"	EPANL, CPX, CPANL
SMKSHP	5.5"	SPANL, EPANL, CPANL, CPX, INDY BL, BLT, GTL[1], VTL/FSL, RTL, BZL, ENVX, STAK

Notes

1 SMKSHP not for use with 2GTL 2 fixture with emergency battery.

1X4SMKSH, 2X2SMKSH, 2X4SMKSH

SURFACE MOUNT KIT - MOUNTING DATA

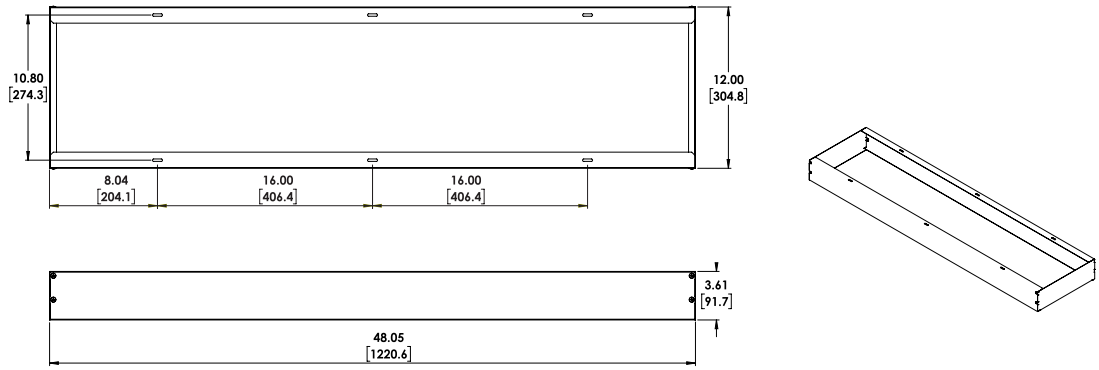

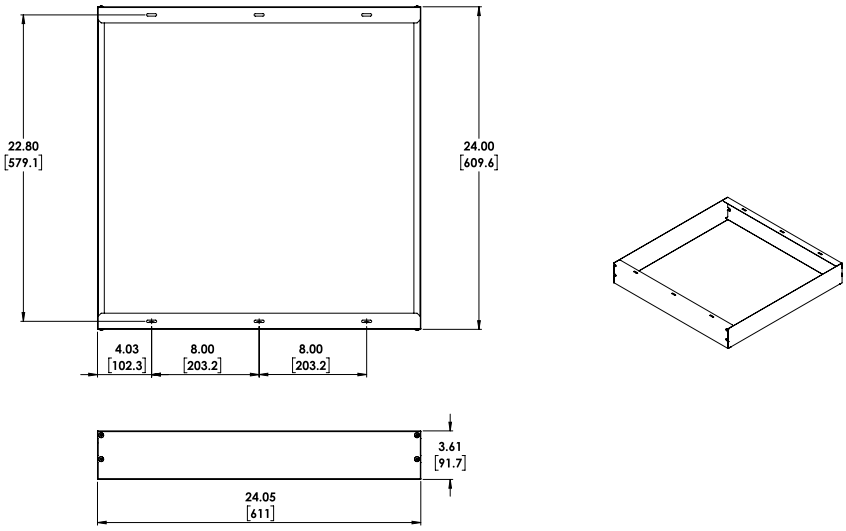

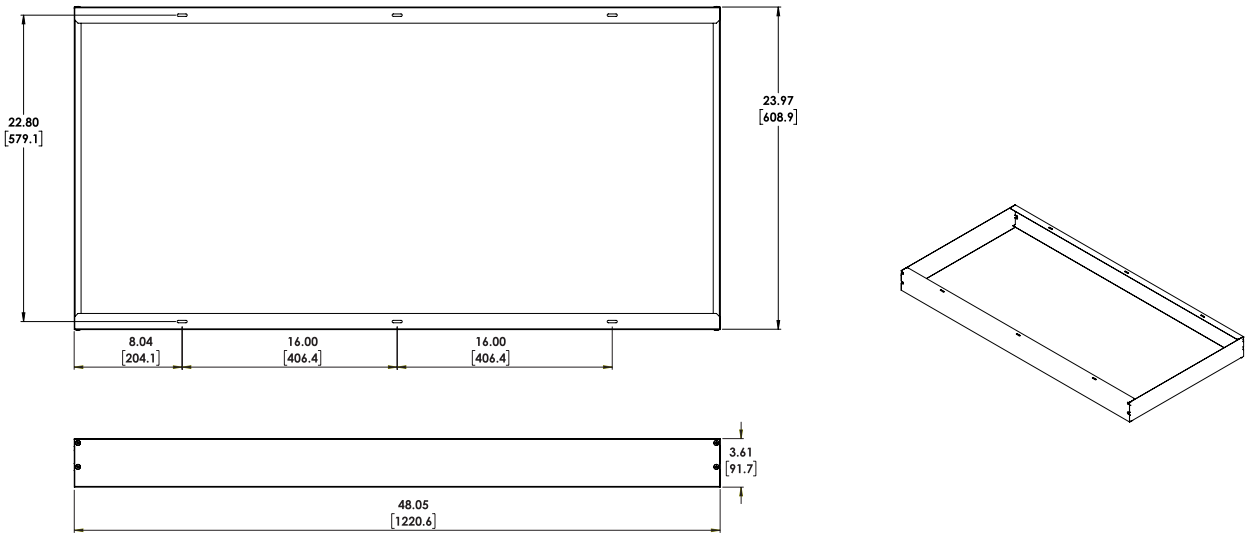

© 2019-2023 Acuity Brands Lighting, Inc. All rights reserved. Rev. 08/14/23

1X4SMKSHP, 2X2SMKSHP, 2X4SMKSHP

SURFACE MOUNT KIT - MOUNTING DATA

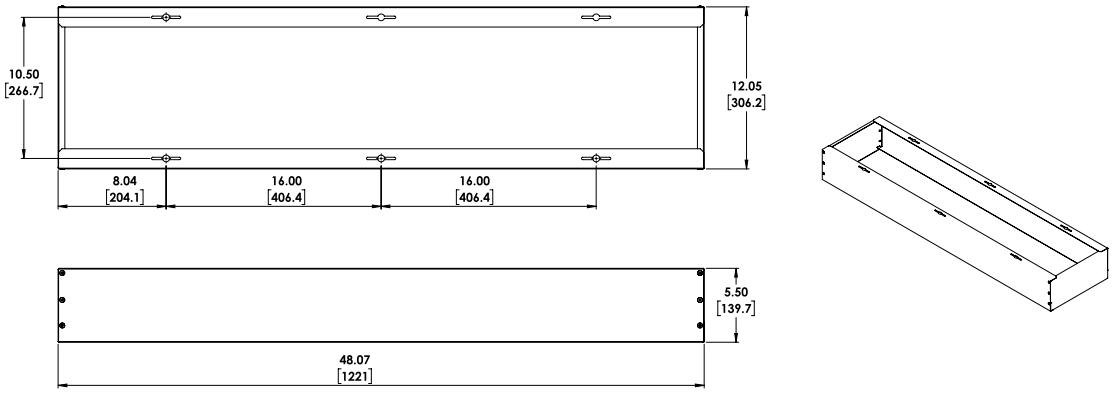

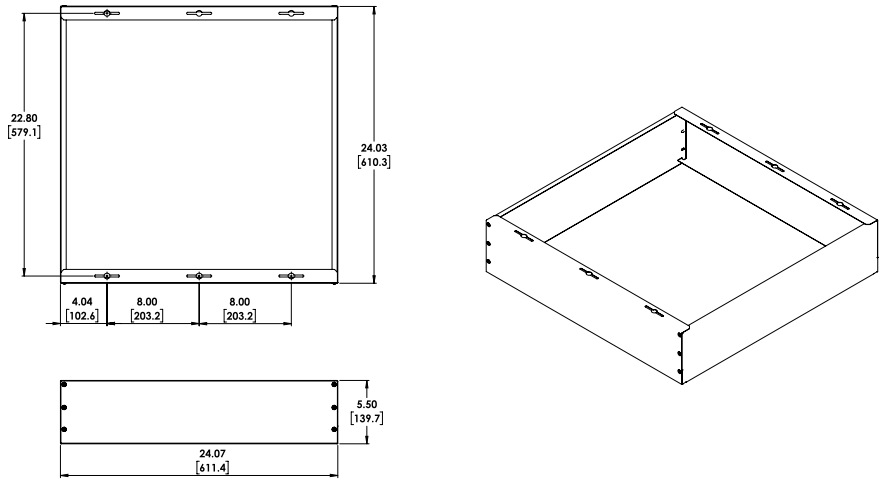

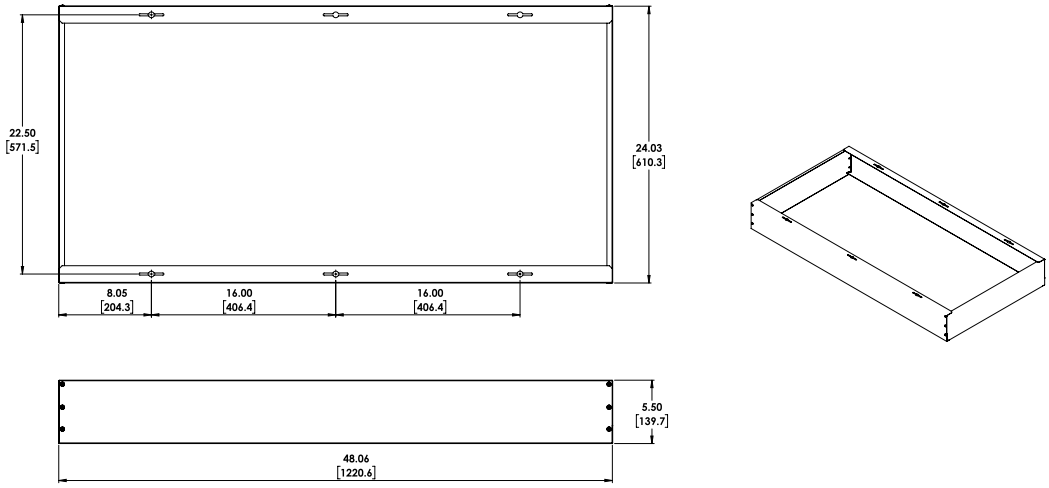

© 2019-2023 Acuity Brands Lighting, Inc. All rights reserved. Rev. 08/14/23

LSIX 2FT SMKSHP

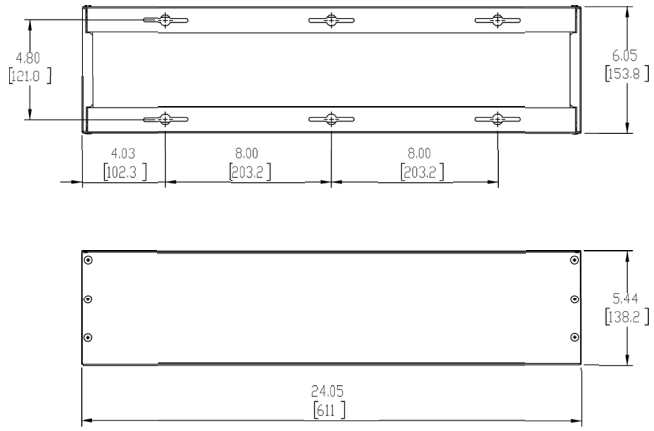

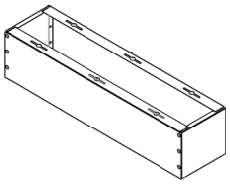

LSIX 4FT SMKSHP

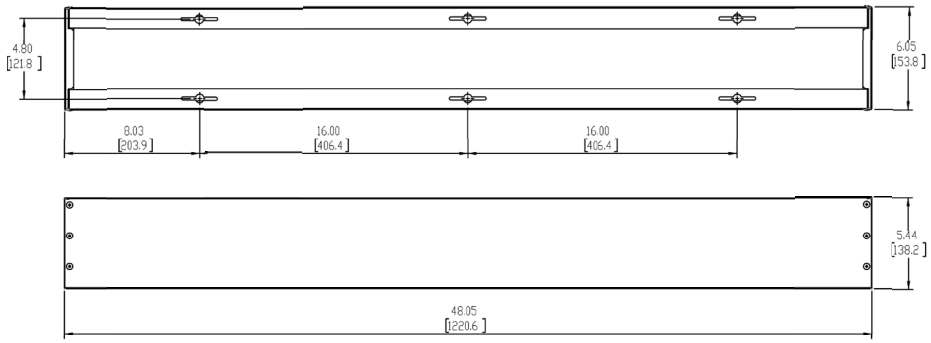

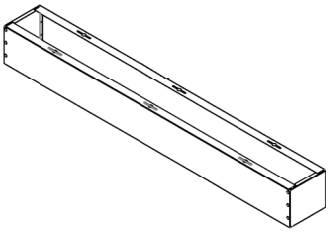

LSIX 8FT SMKSHP

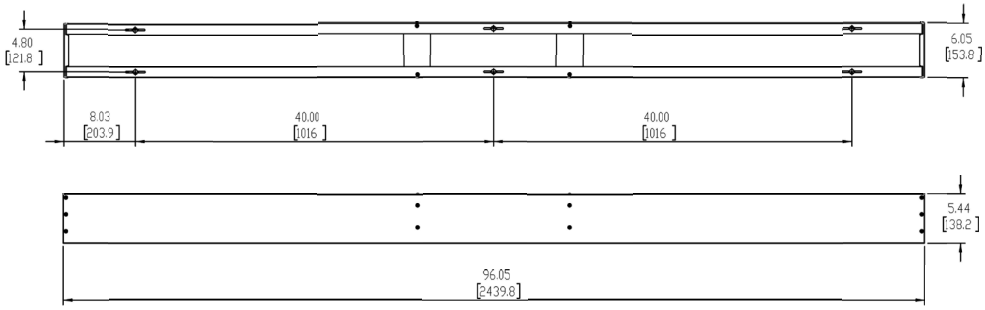

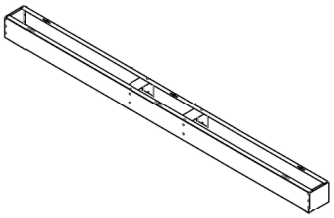

© 2019-2023 Acuity Brands Lighting, Inc. All rights reserved. Rev. 08/14/23